RADIODETECTION®

SPX TECHNOLOGIES

RD7200™

Precision utility Cable & Pipe Locator

Operation manual

90/RD7200-OM-ENG/07

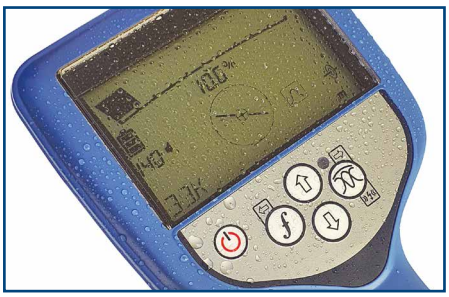

Table of Contents

Section 1 - Preface 2
1.1 Important notices 2
1.2 Compliance.....3
1.3 Intellectual property.....4

Section 2 - Introduction 5
2.1 About this manual 5
2.2 About the RD7200 5
2.3 Extended warranty.....5
2.4 Manual outline 5
2.5 Safety 5
2.6 Training.....6

Section 3 - System overview 7
3.1 RD7200 locator.....8
3.2 Tx-5 and Tx-10 transmitters.....10
3.3 Using the menu.....10

Section 4 - Operation 12
4.1 First use.....12
4.2 Power on / off.....15
4.3 Keypad actions & shortcuts.....15
4.4 Antenna modes.....15
4.5 System setup.....15
4.6 Dynamic Overload Protection™ 17
4.7 Overload warning.....17
4.8 TruDepth™ measurement.....17
4.9 Strike*Alert*™ 17
4.10 Swing Warning.....17
4.11 Vibration (haptic) Warnings.....17
4.12 Backlight.....18
4.13 SideStep*auto*™ 18
4.14 Transmitter power output 18
4.15 Transmitter Eco mode.....18
4.16 Maximum Voltage 19
4.17 Measure mode.....19

Section 5 - Locating cables and pipes 20
5.1 Frequencies.....20
5.2 Choice of frequency for active location.....21
5.3 Antenna modes.....22
5.4 Compass 23
5.5 Trace 23
5.6 Pinpoint.....23
5.7 Sweep and search 23
5.8 Nulling Out 25

Section 6 - Depth and current readings ... 26
6.1 TruDepth™ 26
6.2 Verifying depth measurements 26
6.3 Current readings.....27

Section 7 - Locating techniques 29
7.1 Identifying target utilities 29
7.2 Signal & ground connection 30
7.3 Double-ended connections 30

Section 8 - Fault-finding.....31
8.1 About fault-finding.....31
8.2 Preparation 31
8.3 How to find a fault.....32

Section 9 - Using accessories.....33
9.1 About accessories 33
9.2 Headphones 33
9.3 Locator clamps 33
9.4 Transmitter clamps 34
9.5 Transmitter external power supply 34
9.6 Sondes 35
9.7 Stethoscopes.....37
9.8 Submersible antenna.....37

Section 10 - Appendices 39
10.1 Care and maintenance.....39
10.2 Enhanced Self-Test 40
10.3 RD Manager Online 40
10.4 Warranty and extended warranty 40
10.5 Upgrading software.....40
10.6 eCert.....41
10.7 TX5 and TX10 locator models, operation mode and active frequencies ..42
10.8 TX5 Fault Find locator models 42
10.9 TX 10 Fault Find locator models 43
10.10 List of supported accessories.....43

© 2023 Radiodetection Ltd

Section 1 - Preface

Before you begin

Thank you for your interest in Radiodetection's RD7200™ cable and pipe locator.

Please read this user manual in its entirety before attempting to use the RD7200 system.

Radiodetection products, including this manual, are under continuous development. The information contained within is accurate at time of publication; however the RD7200, this manual and all its contents are subject to change.

Radiodetection Limited reserves the right to modify the product without notice and some product changes may have taken place after this user manual was published.

Contact your local Radiodetection dealer or visit www.radiodetection.com for the latest information about the RD7200 product family, including this manual.

1.1 Important notices

General

The performance of any cable and pipe locator may be affected when used in close proximity to ferrous materials such as manhole covers, steel-toe boots and nearby vehicles. Keep a distance of one or two meters from these objects when taking critical measurements such as depth and current readings.

This instrument, or family of instruments, will not be permanently damaged by reasonable electrostatic discharge and has been tested in accordance with IEC 61000-4-2. However, in extreme cases temporary malfunction may occur. If this happens, switch off, wait and switch on again. If the instrument still malfunctions, disconnect the batteries for a few seconds.

Safety

⚠ WARNING! Failure to comply with safety warnings can cause serious injury or death

CAUTION! Failure to comply with safety cautions can result in damage to equipment or property

This equipment shall be used only by qualified and trained personnel, and only after fully reading this Operation Manual.

⚠ WARNING! Direct connection to live conductors is POTENTIALLY LETHAL. Direct connections to live conductors should be attempted by fully qualified personnel only using the relevant products that allow connections to energized lines.

⚠ WARNING! The transmitter is capable of outputting potentially lethal voltages. Take care when applying signals to any pipe or cable and be sure to notify other technicians who may be working on the line.

⚠ WARNING! Ensure the TX transmitter is switched OFF before making a connection and before disconnection of the direct connection lead to a service.

⚠ WARNING! Reduce audio level before using headphones to avoid damaging your hearing.

⚠ WARNING! This equipment is NOT approved for use in areas where hazardous gases may be present.

⚠ WARNING! Before removing the transmitter battery pack, switch off the unit and disconnect all cables

⚠ WARNING! The mains PSU supply cable is the disconnecting method for isolating the unit from the main supply.

⚠ WARNING! The battery compartment lid is the disconnecting method for isolating the unit from the battery supply. The Li-Ion rechargeable battery pack (if fitted) has an additional connector.

⚠ WARNING! Do not position the erquipment so it is difficult to disconnect the unit from each supply.

⚠ WARNING! Protection will be impaired if used in a manner not specified.

⚠ WARNING! The RD7200 locator will detect most buried conductors but there are some objects, including live objects, which do not radiate any detectable signal. The RD7200, or any other electromagnetic locator, cannot detect these objects so proceed with caution. There are also some live cables which the RD7200 will not be able to detect in Power mode. The RD7200 does not indicate whether a signal is from a single cable or from several in close proximity.

CAUTION: The battery cover, the accessory cover and the headphone cover protect the locator's sockets from debris and water ingress. If they get damaged or lost, contact Radiodetection or your local service representative for replacements.

Batteries

⚠ WARNING! Only use charging equipment provided by Radiodetection. The use of alternative chargers may cause a safety hazard and/or reduce the life of the battery.

CAUTION: Do not let your battery completely discharge as this may reduce its life or damage it permanently. If you are not using your equipment for a long period charge it at least once a month.

CAUTION: thoroughly check batteries for any signs of damage prior to first use.

⚠ WARNING! Batteries can get hot after prolonged use at full output power. Take care while replacing or handling batteries.

⚠ WARNING! Do not tamper with, or attempt to disassemble the battery packs.

CAUTION: If battery failure is suspected or if the battery shows any sign of discoloration / physical damage, contact an authorized repair center to have the units returned for investigation and repair. Local, national or IATA transport regulations may restrict the shipment of faulty batteries. Check with your courier for restrictions and best practice guidelines.

Radiodetection representative will be able to direct you to our authorized repair centres.

Disposal

This symbol on the product, accessories or literature indicates that the product and its electronic accessories (e.g. charger, headset, USB cable) must not be treated as domestic waste, but must be disposed of professionally. It is your responsibility to dispose of your waste equipment by handing it over to a designated collection point for the recycling of waste electrical and electronic equipment. The separate collection and recycling of your waste equipment at the time of disposal will help to conserve natural resources and ensure that it is recycled in a manner that protects human health and the environment. For more information about where you can drop off your waste equipment for recycling, please contact your local city office, your disposal service or product supplier.

Please dispose of this device in a manner appropriate to the relevant legal requirements at the end of its product life

Batteries should be disposed of in accordance with your company's work practice, and / or the relevant laws or guidelines in your country or municipality.

1.2 Compliance

The Declaration of conformity is available to download from the RD7200 cable and pipe product section page in https://www.radiodetection.com/

For EMC and Safety compliance refer to the relevant Technical specification document, which is available to download from **the RD7200 cable, pipe product section page in https://www.radiodetection.com/**

FCC Compliance Statement

This equipment complies with Part 15 of the FCC Rules. Operation is subject to the following two conditions:

- The equipment may not cause harmful interference.
- The equipment must accept any interference received, including interference that may cause undesired operation.

This equipment has been tested and found to comply with the limits for a Class A digital device pursuant to Part 15 of the FCC Rules.

These limits are designed to provide reasonable protection against harmful interference when the equipment is operated in a commercial environment. This equipment generates, uses, and can radiate radio frequency energy and, if not installed and used in accordance with the manufacturer's instruction manual, may cause harmful interference with radio communications. Operation of this equipment in a residential area is likely to cause harmful interference, in which case you will be required to correct the interference at your own expense.

Modifications: Any modifications made to this equipment not approved by Radiodetection may void the authority granted to the user by the FCC to operate this equipment.

Industry Canada Compliance Statements

ICES-003 Class A Notice:

This Class A digital apparatus complies with Canadian ICES-003.

Avis NMB-003, Classe A:

Cet appareil numérique de la classe A est conforme à la norme NMB-003 du Canada

Environmental

WEEE, ROHS

Manufacturing

ISO 9001:2015

1.3 Intellectual property

© 2023 Radiodetection Ltd. All rights reserved. Radiodetection is a subsidiary of SPX Technologies. Radiodetection and RD7200 are registered trademarks of Radiodetection in the United States and/or other countries.

Trademarks and Notices. The following are trademarks of Radiodetection: eCert, TruDepth, SideStep, SideStep*auto*, Power Filters, RD Manager Online, Peak+, StrikeAlert, CALSafe. The design of the RD7200 locators and transmitters has been registered. The design of the 4 chevrons has been registered.

Windows is either a registered trademarks or trademarks of Microsoft Corporation in the United States and / or other countries.

Due to a policy of continued development, we reserve the right to alter or amend any published specification without notice. This document may not be copied, reproduced, transmitted, modified or used, in whole or in part, without the prior written consent of Radiodetection Ltd.

Section 2 - Introduction

2.1 About this manual

This manual provides underground utilities survey professionals with comprehensive operating instructions for the RD7200 locator and transmitter system. Before operating the RD7200 system, it is very important that you read this manual, noting all safety warnings and procedures.

Additional documentation

The full product specification and RD Manager Online manuals are available to download from www.radiodetection.com.

2.2 About the RD7200

The RD7200 product family offers a comprehensive range of locators and transmitters designed to meet specific customer needs.

The RD7200 locator is ergonomically designed to provide the operator with a balanced, light weight tool that encourages extended use in most environments.

A wide range of accessories are available to enhance the performance and to add extra functionality.

For more information about the Precision Locate Accessories Range, visit

www.radiodetection.com/accessories

2.3 Extended warranty

RD7200 locators and transmitters are covered by a 1-year warranty as standard.

Users can extend the warranty period to a total of 3 years by registering their products (locators and transmitters) within 3 months from purchase.

To register your product:

> Visit portal.radiodetection.com to create your portal account* and use the Product page to register your locator or transmitter.
>
> Visit support.radiodetection.com for instructions on how to create a portal account or register your product.
>
> * A valid e-mail address and mobile number are required.

From time to time Radiodetection may release new software to improve the performance or add new functionality to products. By registering the user will have the option of subscribing to e-mail alerts advising about any new software and special offers related to its product range.

Users can opt out any time from receiving software and technical notifications or just from receiving marketing material.

2.4 Manual outline

Section 1 includes an overview of safety procedures and notices. Review them before moving on to Section 2 and the rest of this manual

Section 3 provides an overview of the RD7200 system with annotated diagrams of the locator and transmitter

Section 4 introduces basic setup and operation using the RD7200 locator's menu system.

Section 5 introduces the theory and practice of cable and pipe location using the RD7200 locator and transmitter.

Section 6 introduces depth and current readings.

Section 7 provides general locating tips.

Section 8 introduces cable sheath fault-finding using the RD7200 locator and an accessory A-frame.

Section 9 introduces the range of accessories that are compatible with the RD7200 system.

Section 10 includes several appendices with reference material and other technical information.

2.5 Safety

Read this manual in its entirety before attempting to operate the RD7200 locator or transmitter. Note all safety notices in the preface and throughout this manual

You are responsible for determining whether the conditions are suitable for using this device. Always carry out a risk assessment of the site to be inspected

Follow your company and national safety procedures and or requirements when operating this equipment in any environment or workplace. If you are unsure what policies or procedures apply, contact your company or site's occupational health and safety officer or your local government for more information.

Do not use this equipment if you suspect that any component or accessory is damaged or faulty.

Before inserting the earth stake into the ground, ensure there are no shallow cables or services that could be damaged by the earth stake

Use authorized accessories only. Incompatible accessories may damage the equipment or give inaccurate readings.

If you intend to uncover a sub-surface utility by digging, you must follow your company, region and country's codes of practice for excavation.

Keep this equipment clean and arrange for regular services with an authorized Radiodetection service center. More information can be found in the Appendix or from your local Radiodetection representative.

It is important to regularly clean and sanitize products which may become contaminated through contact with foul water or other contaminants

Headphone use: you need to remain alert to traffic and other hazards that are normally heard outdoors. Always turn the volume down before plugging headphones into an audio source and use only the minimum level, necessary to take your measurements. Excessive exposure to loud sounds can cause hearing damage.

Do not attempt to open or dismantle any part of this equipment unless directed specifically by this manual. Doing so may render the equipment faulty and may void the manufacturer's warranty.

You are responsible for determining whether you consider the measurement results to be valid and for any conclusions that are reached or any measures that are taken as a result thereof. Radiodetection can neither guarantee the validity of any measuring results nor can we accept liability for any such results. We are on no account able to accept liability for any damage which may be caused as a consequence of the use of these results. Please see the Standard Warranty Terms enclosed with the product for further information.

2.6 Training

Radiodetection provides training services for most Radiodetection products. Our qualified instructors will train equipment operators or other personnel at your preferred location or at Radiodetection headquarters.

For more information go to www.radiodetection.com or contact your local Radiodetection representative.

Section 3 - System overview

Figure 3.1: RD7200 Locator

3.1 RD7200 locator

Locator features

1 Keypad

2 LCD with auto backlight

3 Haptic (vibration) feedback

4 Speaker

5 Battery compartment

6 Accessory connector

7 Headphone connector

8 Bluetooth module antenna

9 SWING Warning system

10 Optional Lithium-Ion battery pack

11 USB connector (inside the battery compartment)

Locator keypad

12 Power key ⏻: Switches the unit on and off.
Opens the locator menu

13 Frequency key ƒ: Selects frequency.
Closes submenu

14 Up and down arrows ⇧ ⇩: Adjusts the locator signal gain.
Scrolls through the menu options

15 Antenna key: toggles Peak, Peak+, Null and Guidance modes.
Opens a submenu

Locator screen icons

16 Indicates the signal strength and Peak marker

17 Signal strength: Numerical indication of signal strength

18 Null / Proportional Guidance arrows: Indicates the location of the line relative to the locator

19 Battery icon: Indicates the battery level

20 Gain readout

21 Volume icon: Displays the volume level

22 Radio Mode: Indicates when Radio Mode is active

23 Power Mode: Indicates when Power Mode is active

24 Accessory indicator: Indicates when an accessory is connected

25 A-Frame icon: Indicates when the A-Frame is connected

26 Frequency / current / menu readout

27 Antenna mode icon: Indicates antenna selection: Peak, Null, Peak+ and Guidance Mode (model dependent)

28 Sonde icon: Indicates that the signal source is from a sonde

29 Line icon: Indicates that the signal source is from a line

30 Compass indicator: Shows the direction of the located cable relative to the locator.

31 Transmitter standby indicator

32 Depth readout

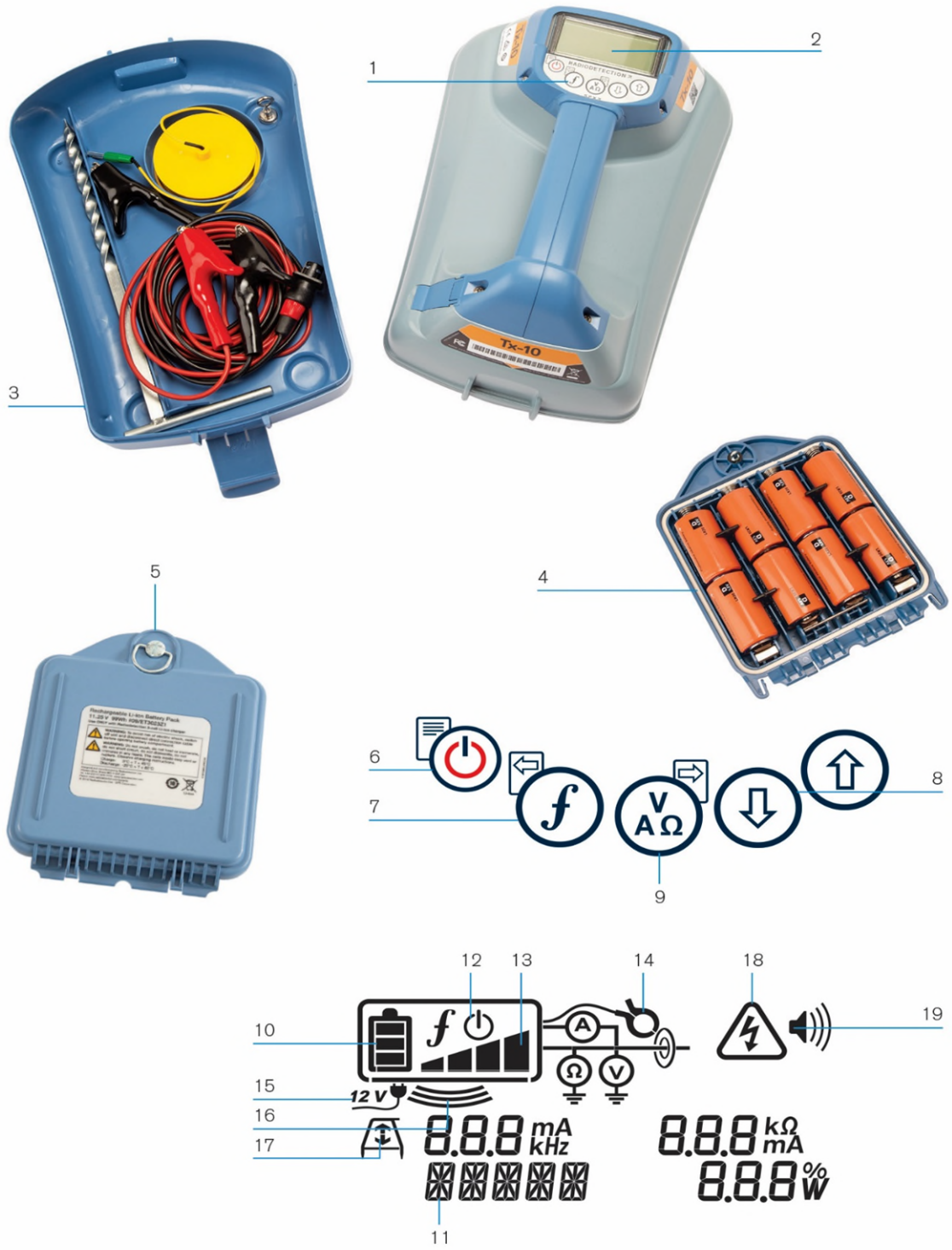

Figure 3.2 Tx Transmitter

3.2 Tx-5 and Tx-10 transmitters

Transmitter features

1 Keypad

2 LCD

3 Removable accessory tray

4 D-cells battery holder

5 Optional Lithium-Ion rechargeable battery pack

Transmitter keypad

6 Power key : Switches the unit on and off.
Opens the transmitter menu

7 Frequency key : Selects frequency.
Menu navigation key

8 Up and down arrows : Adjusts the output signal level.
Scrolls through the menu options

9 Measure key : Used to take voltage and impedance measurements.
Opens a sub menu.

Transmitter screen icons

10 Battery icon: Indicates the battery level

11 Alphanumeric description of selected operation mode

12 Standby icon: Appears when the transmitter is in Standby Mode

13 Output level: Displays transmitter output power

14 Accessory or Measurement indicators: Indicates if an accessory is connected or if measure mode is active

15 DC icon: Appears when the transmitter is powered from a DC source

16 Induction indicator: Appears when the transmitter is in Induction Mode

17 A-Frame (Tx-5 or Tx-10 only): Indicates when the transmitter is in Fault-Find Mode

18 Voltage warning indicator: Indicates that the transmitter is outputting potentially hazardous voltage levels

19 Volume icon: Displays the volume level

Figure 3.3 Tx-5 and Tx-10 signal transmitters

3.3 Using the menu

The RD7200 locator and transmitter menus allow you to select or change system options. Once entered, the menu is navigated using the arrow keys. Navigation is consistent on both the transmitter and the locator. In the menu the options will appear in the bottom left-hand corner of the display. Note that when browsing the locator menu, the and keys act as left and right arrows. When browsing the transmitter menu the and keys act as left and right arrows. The right arrow enters a submenu and the left arrow selects the option and returns to the previous menu.

Navigating the locator menu

1 Press the key to enter the menu

2 Use the or keys to scroll through the menu options

3 Press the key to enter the option's submenu

4 Use the or arrows to scroll through the submenu options

5 Press the key to make a selection and return to the previous menu

6 Press the key to return to the main operation screen

Locator menu options

VOL	Adjust the speaker volume from 0 (mute) to 5 (loudest)
UNITS	Select metric or imperial units
LANG	Select menu language
POWER	Select local power network frequency: 50 or 60Hz
ANT	Enable or disable antenna modes with the exception of Peak
FREQ	Enable or disable individual frequencies
ALERT	Enable or disable Strike*Alert*
BATT	Set battery type: Alkaline, NiMH or Li-Ion
ARROW	Select NULL or proportional Guidance (GUIDE) arrows in Peak+ mode
COMPA	Enable or disable display of the Compass feature.
VALRT:	Enable or disable vibrating handle warnings.
AUDIO	Set audio tone frequency level high or low
SWING	Enable or disable swing warning
INFO	Run a Self-Test, show the locator software version and revision, display

	the date of the most recent service recalibration (CAL) or the most recent eCert calibration (ECERT)

Table 3.1 Locator menu options

Navigating the transmitter menu

1 Press the key to enter the menu

2 Use the or keys to scroll through the menu options

3 Press the key to enter the option's submenu.

4 Use the or keys to scroll through the submenu options

5 Press the key to confirm selection and return to the previous level or exit the menu

6 Press the key to return to the main operation screen

Transmitter menu options

VOL	Adjust the speaker volume from 0 (mute) to 3 (loudest)
FREQ	Enable or disable individual frequencies
BOOST	Boost transmitter output for a specified period of time (in minutes)
LANG	Select menu language
OPT F	Run SideStep*auto*™ to auto-select a locate frequency for the connected utility
BATT	Set battery type: Alkaline, NiMH or Li-Ion. Select Eco mode (alkaline batteries only)
MAX P	Set the transmitter to output its maximum wattage.
MODEL	Match the transmitter setting to the model of your locator (see Appendices for a list of all available models)
MAX V	Set the output voltage to maximum (90V)
INFO	Show the transmitter software version and revision

Table 3.2 Transmitter menu options

Section 4 - Operation

4.1 First use

Power options

RD7200 systems are shipped as standard configured to use Li-Ion battery packs.

Both the locator and transmitter can also be powered using good quality rechargeable D-cell NiMH batteries or the optional accessory Li-Ion rechargeable battery packs. It's important to set the correct battery chemistry in the locator to optimize performance, see Section 4.5

Transmitters can also be powered using optional accessory mains or vehicle power adapters. Refer to section 10.11 for more information.

Inserting batteries

RD7200 systems are shipped with D cell battery trays. Suitable alkaline or NiMH batteries should be fitted in the battery compartment before your first use.

On the Locator:

To fit the D-cell batteries in the locator, unlatch the battery compartment

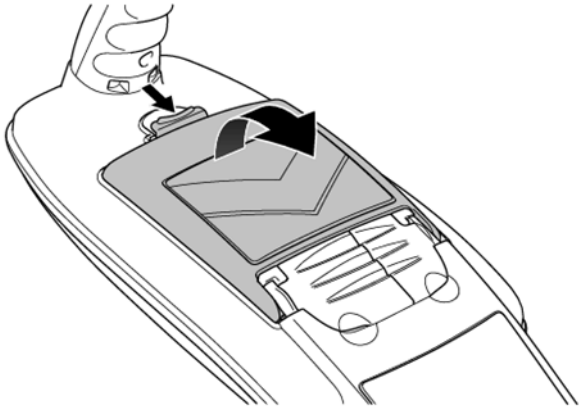

Figure 4.1 Open the battery compartment

Insert 2 × good quality D-cell batteries. Note the polarity of the cells when inserting them in the battery tray.

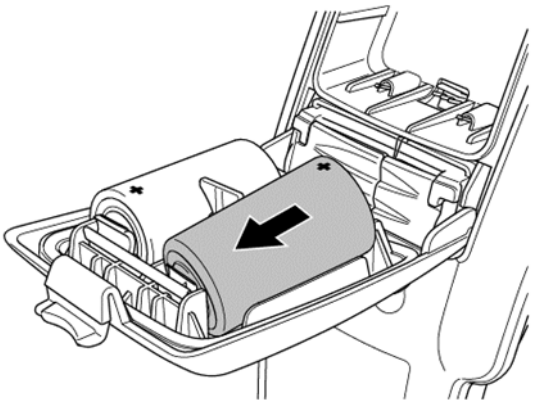

Figure 4.2 Inserting locator batteries

On the transmitter:

To fit the D-cell batteries in the transmitter, unlatch the accessory tray. The battery compartment (see figure 3.2) is located underneath the transmitter body. Use the turnkey to unlatch the battery compartment. Insert eight D-Cell Alkaline or NiMH batteries.

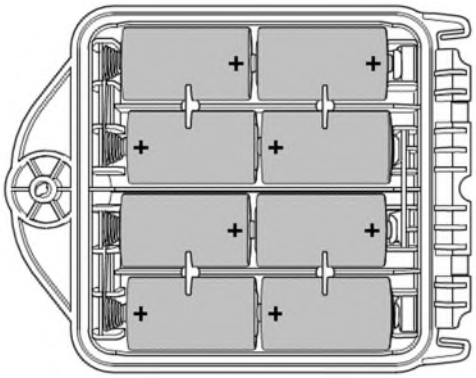

Figure 4.3 D-cell battery trays

Battery status

The locator and transmitter displays provide a battery level indicator (refer to the diagrams in Section 3. When battery replacement is necessary, the display shows a flashing battery icon.

NOTE: The locator volume may automatically lower if set to level 5 or 4, when using alkaline batteries and if their charge is low. When this happens, the display will shortly flash the 'LOW BATT' warning and show the reduced volume level.

NOTE: Prolonged use of maximum volume and vibration alerts on the locator will reduce battery life.

NOTE: Prolonged use of high power output on the transmitter will reduce battery life.

Removing / fitting battery packs

Locator battery pack:

1 Open the battery compartment using the release catch (figure 4.1)

2 If using a Li-Ion battery pack un-plug the lead connector (see figure 4.7)

3 Lift the accessory cover slightly and press the battery retaining latch inwards

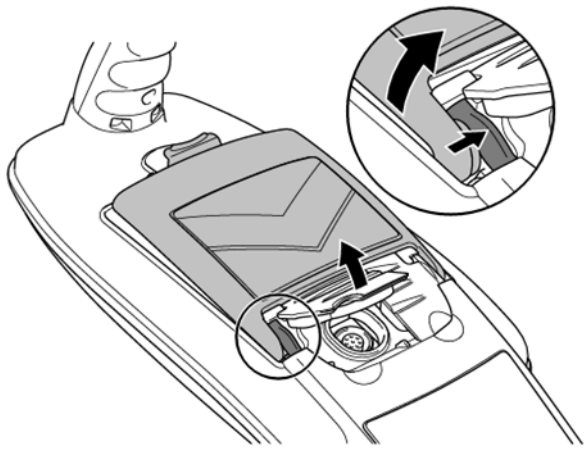

Figure 4.4 Press the retaining latch inwards

4 Rotate the battery pack away and up from the latch

5 Repeat on the other side to release the battery pack completely then lift the battery pack away

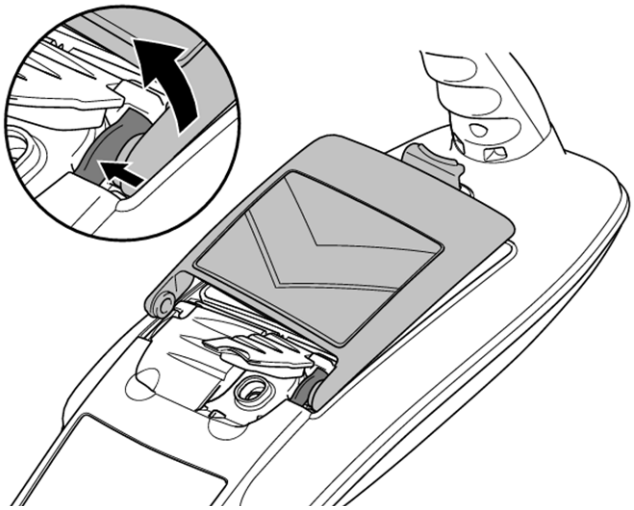

Figure 4.5 Repeat then lift the battery pack away

To fit a new battery, lift both accessory covers slightly, then gently push the replacement pack into place until it clicks on both sides, then close the battery pack

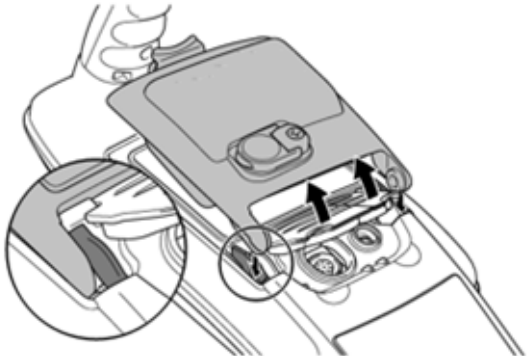

Figure 4.6 Installing a new battery pack

If using the Li-ion battery pack, plug the lead into the battery connector (fig 4.7).

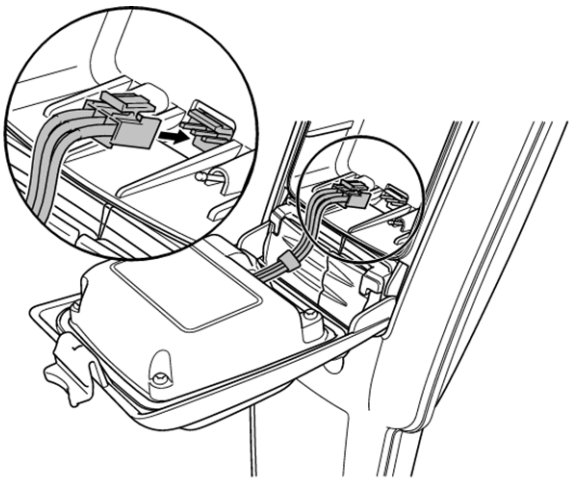

Figure 4.7 Connecting the Li Ion lead

NOTE: Fully charge your lithium-ion battery pack before its first use

Transmitter battery pack:

1 Unlatch then remove the accessory tray

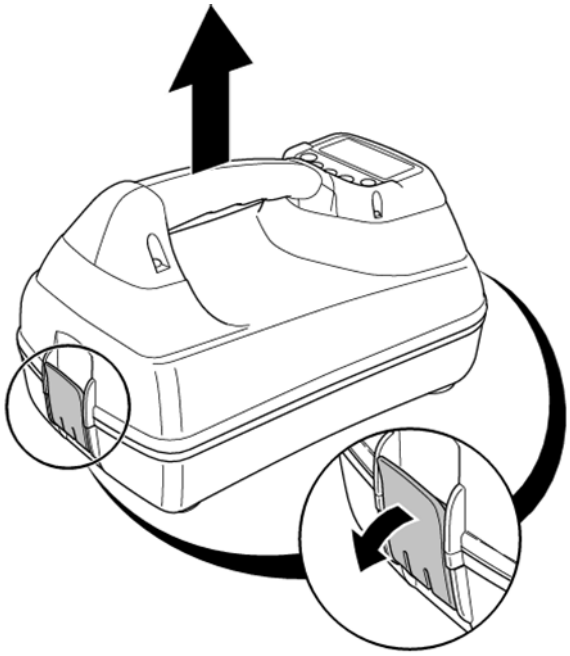

Figure 4.8 Release then remove the accessory tray

2 Turn the release catch, then open the battery compartment

3 Release the retaining catch (fig 4.10) by pressing gently, then lift the battery pack away

4 Line up the battery pack clips with the corresponding recesses on the transmitter body and press into place (fig 4.11)

5 Close the battery pack, turn the retaining latch and replace the accessory tray

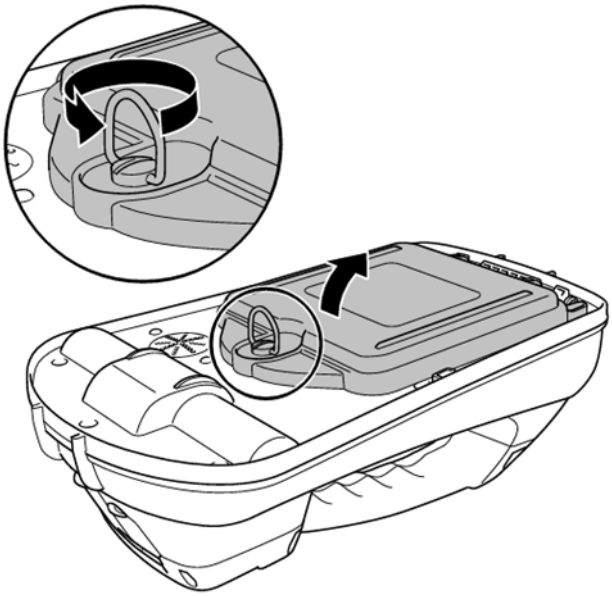

Figure 4.9: Opening the battery compartment

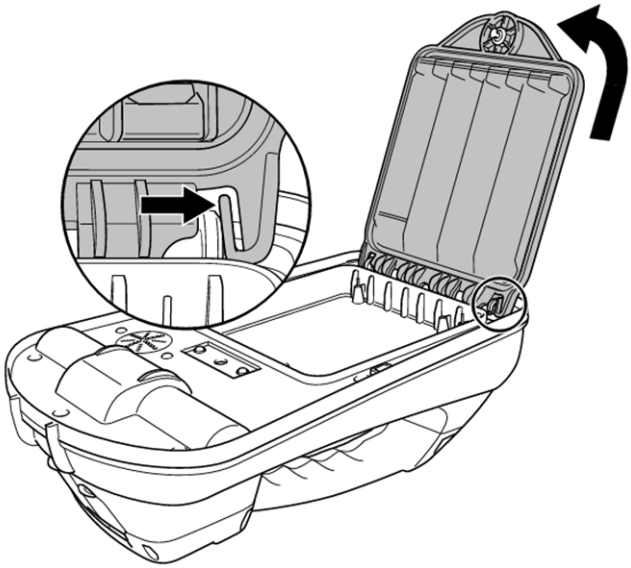

Figure 4.10: Press the release catch and lift the battery pack away

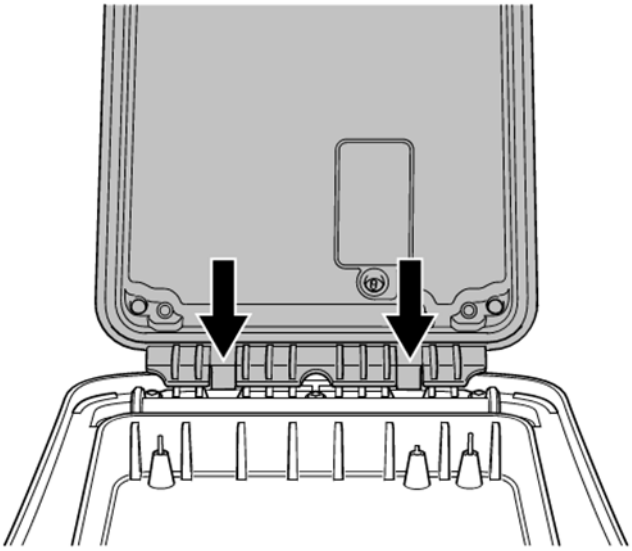

Figure 4.11: Line up the battery pack and press into position

Charging the battery packs

⚠ WARNING! Only use charging equipment provided by Radiodetection. The use of alternative chargers may cause a safety hazard and/or reduce the life of the battery.

CAUTION: Do not let your battery completely discharge as this may reduce its life or damage it permanently. If you are not using your equipment for a long period do charge them at least once a month.

⚠ WARNING! Batteries can get hot after prolonged use at full output power. Take care while replacing or handling batteries.

⚠ WARNING! Do not tamper with, or attempt to disassemble the battery packs.

CAUTION: If battery failure is suspected or if the battery shows any sign of discoloration / physical damage return the entire unit to an authorized repair center for investigation and repair. Local, national or IATA transport regulations may restrict the shipment of faulty batteries. Check with your courier for restrictions and best practice guidelines. Your local Radiodetection representative will be able to direct you to our authorized repair centers.

You can re-charge your batteries using the Radiodetection mains or automotive chargers.

NOTE: The charging temperature range is 0 to 45 °C, 32 to 113°F. Do not attempt to recharge your batteries outside this temperature range.

Locator Li-Ion battery pack

To recharge the locator battery pack, connect the battery charger to the DC input connector on the front of the battery pack.

Figure 4.12 Charging the locator Li-ion battery pack

Transmitter Li-ion battery pack

To recharge the battery pack, remove the pack from the transmitter and connect the transmitter battery charger.

Figure 4.13 Charging the transmitter Li-Ion battery pack

For more information about recharging batteries refer to the instructions that came with your charger

4.2 Power on / off

Switch the locator or transmitter on by pressing the key.

To switch the locator or transmitter off, press and hold the key until the screen blanks off.

NOTE: The locator will automatically power off after 5 minutes if no keys are pressed.

4.3 Keypad actions & shortcuts

Locator key actions

Key	Short press	Long press
	Enter the menu	Switch power off
	Scroll through locate frequencies from low to high	
	When using active frequencies: Toggle Peak, Peak+, Null and Guidance antenna modes. *In Power Mode:* scroll through Power Filters™ for improved discrimination of parallel or strong power signals	*In Peak+ antenna mode:* Switch between Guidance and Null arrows
	Increase and decrease gain. RD7200 automatically sets gain to mid-point when pressed	Rapidly increase and decrease gain steps in 1dB increments

Table 4.1: Locator key actions

Transmitter key actions

Key	Short press	Long press
	Enter the menu	Switch power off
	Scroll through locate frequencies from low to high	-
	Take voltage and impedance measurements using selected frequency	Take voltage and impedance measurements at a standardized frequency
	Adjusts the output signal	Select standby / maximum standard power

Table 4.2: Transmitter key actions

NOTE: to scroll through frequencies from high to low, hold while pressing the button (applies to both locators and transmitters)

4.4 Antenna modes

The RD7200 locator supports 4 antenna modes to suit your particular application or the local environment.

To scroll between locate modes, press the key.

PEAK: For accurate locating, the Peak bargraph provides a visual readout of the signal strength. The Peak signal is found directly over the buried utility.

PEAK+: Choose to combine the accuracy of the Peak bargraph with Null arrows, which can indicate the presence of distortion, or with proportional Guidance arrows for rapid line tracing – switch between them by pressing and holding the key.

GUIDANCE: Proportional arrows and a ballistic directional 'needle' combine with audio left/right indication for rapidly tracing the general path of a buried utility.

NULL: Provides a quick left/right indication of the path of a utility. As Null is susceptible to interference, it is best used in areas where no other utilities are present

For more information on selecting and using the various antenna modes to assist with cable and pipe location, refer to Section 5.

4.5 System setup

The RD7200 locator and transmitter settings can be accessed via the menu. Once in the menu it is possible to change settings according to your personal preferences and operating requirements. Some examples of setting changes are shown below.

Refer to the locator and transmitter menu options (tables 3.1 and 3.2) for more information.

NOTE: These procedures refer to both the transmitter and locator unless stated otherwise.

Before changing settings, ensure the locator or transmitter is switched on by pressing the key for two seconds.

Language

The locator and transmitter support a number of languages. You can specify your preferred language using the menu system.

To select your preferred menu language:

1 Press the key to enter the menu

2 Scroll to the **LANG** menu using the or keys

3 Press the key (on the locator) or the key (on the transmitter) to enter the LANG menu

4 Scroll through the language options using the or keys

5 Press the key to accept your selection and return to the main menu.

6 Press the key to return to the main operation screen.

Battery type

RD7200 locators and transmitters support Lithium-Ion, Alkaline or Nickel Metal Hydride batteries.

You should set the Locator and transmitter battery type to match the currently installed type. This is to ensure optimal performance and correct battery level indication.

Lithium-Ion batteries will automatically be detected by the locator

To set your battery type:

1 Press the key to enter the menu

2 Scroll to the **BATT** menu using the or arrows

3 Press the key (on the locator) or the key (on the transmitter) to enter the BATT menu

4 Scroll through the battery options using the the or keys.

5 Press the key to accept your selection and return to the main menu

6 Press the key to return to the main operation screen

7 If you are using the optional Li-Ion battery pack, the locator will automatically select the correct battery type.

Power network frequency

Select the correct frequency (50 or 60Hz) for your country or region's power supply on your locator.

To change power frequency on the locator:

1 Press the key to enter the menu

2 Scroll to the **POWER** menu using the or keys

3 Press the key to enter the POWER menu

4 Scroll through the power options using the or keys

5 Press the key to accept your selection and return to the main menu

6 Press the key to return to the main operation screen

Measurement units

The RD7200 locator allows you to work in Metric or Imperial (US customary) units.

To select your preferred units:

1 Press the key to enter the menu

2 Scroll to the UNITS option using the or keys

3 Press the key to enter the UNIT menu

4 Scroll through the measurement options using the or keys to select **METRE** (for metric) or **IMP** (for imperial) units

5 Press the key to accept your selection and return to the main menu

6 Press the key to return to the main operation screen

Enabling / disabling frequencies

The locator and transmitter support a wide range of frequencies and there may be times when some of these frequencies are not used. It is possible to quickly enable or disable frequencies using the menu system.

To enable or disable frequencies:

1 Press the key to enter the menu

2 Scroll to the **FREQ** menu using the or keys

3 Press the key (on the locator) or the key (on the transmitter) to enter the FREQ menu

4 Scroll through the frequency options using the or keys

5 Press the key (on the locator) or the key (on the transmitter) to enter the frequency

6 Scroll to OFF or ON using the or keys

7 Press the key to accept your selection and return to frequency menu.

8 If you wish to make any further changes follow steps 4 to 6. If you do not wish to make any further changes

press the ⓕ key twice to return to the main operation screen.

Volume control

The transmitter and locator feature an internal speaker to provide critical warnings and assist with cable and pipe location.

To adjust audio level:

⚠ WARNING! Muting audio on the locator will disable the StrikeAlert audio alarm.

1 Press the ⏻ key to enter the menu

2 Scroll to the **VOL** menu the ⇧ or ⇩ arrows

3 Press the key (locator) or the key (transmitter) to enter the **VOL** menu

4 Scroll through the volume option using the ⇧ or ⇩ keys

5 Press the ⓕ key to accept your selection and return to the main menu.

6 Press the ⏻ key to return to the main operation screen.

NOTE: The locator volume may automatically lower if set to level 5 or 4, when using alkaline batteries and if their charge is low. When this happens, the display will shortly flash the 'LOW BATT' warning and show the reduced volume level.

4.6 Dynamic Overload Protection™

Dynamic Overload Protection™ (DOP) allows you to locate accurately in areas with high levels of electromagnetic interference, such as sub-stations and beneath high-voltage transmission lines. DOP works by disregarding signal spikes that would otherwise overwhelm the RD7200 locator's digital signal processor. DOP is an integrated feature of all RD7200 locators. No action is required by the user.

4.7 Overload warning

In cases of high levels of electromagnetic interference, the DOP will not be able to prevent the RD7200 from becoming overloaded. If the RD7200 becomes overloaded, users will be alerted by a flashing mode icon. Both the depth and current measurements will be disabled in the event of an overload.

4.8 TruDepth™ measurement

All RD7200 locators use TruDepth™ to measure depth automatically when a good quality reading can be assured.

NOTE: TruDepth only indicates a locate depth when

- The locator is correctly oriented above the target line, cable or sonde.
- The local signal conditions are assessed as be good enough to ensure an accurate reading

To help you orientate the locator correctly, you can use the locator's compass feature on the screen

Depth readings are displayed according to your preferred units of measurement.

For more information on measuring depth, refer to Section 6.

4.9 Strike*Alert*™

Strike*Alert* detects the possible presence of shallow utilities, and warns the operator with a series of flashing asterisks on the display and an audible alarm, characterized by a rapid warbling sound.

Strike*Alert* will activate in Power and Active locate modes.

RD7200 locators are shipped with Strike*Alert* enabled by default; this can be disabled by accessing the Strike*Alert* ('ALERT') menu and setting StrikeAlert to OFF.

Strike*Alert* can also be disabled using the RD Manager Online PC software. Refer to the RD Manager Online operation manual for further information.

⚠ WARNING! Muting audio on the locator will disable Strike*Alert* Audio alarm.

4.10 Swing Warning

The RD7200 locator is equipped with a Swing Warning system.

In order to operate the RD7200 locator properly, this must not be swing or tilted more than a few degrees from the vertical. Swinging or tilting the locator will affect the locate and depth/current accuracy.

The Swing Warning system will alert operators of excessive swinging, to remind them to use the device correctly

RD7200 locators are shipped with Swing Warning enabled by default; this can be disabled by accessing the Swing Warning ('SWING) menu and setting it to OFF.

⚠ WARNING! Muting audio on the locator will disable Swing Warning Audio alarm.

4.11 Vibration (haptic) Warnings

The RD7200 locators are equipped with a vibration system in the handle, providing haptic feedback to the user when an alarm is active.

The handle will vibrate to warn the user of shallow cables/pipes, overload condition and swing warning.

This is a safety feature that can be useful in noisy environments.

RD7200 locators are shipped with Vibration Feedback enabled by default; this can be disabled by accessing the Vibration alert ('VALRT') menu and setting it to OFF.

NOTE: The Vibration alert may cause the volume to reduce automatically from level 5 or 4 when using alkaline batteries and if their charge is low.

4.12 Backlight

The transmitter and locator feature a backlight to improve LCD visibility when required. The locator's backlight is controlled by an ambient light sensor and does not require adjustment by the user.

The transmitter's LCD backlight is activated whenever you press a key. The backlight will automatically switch off after a few minutes.

4.13 SideStep*auto*™

The transmitter can be used to recommend a general-purpose locate frequency for the intended locate task by measuring the impedance of the target cable or pipe.

SideStep*auto*™ helps to improve locate accuracy by determining the best signal. SideStep*auto* can also help to prolong battery life.

SideStepauto operates only in Direct Connection mode.

Using SideStep*auto*

To enable SideStep*auto*:

Connect the transmitter to the target utility, then

1 Press the key to enter the menu

2 Scroll to the OPT F menu using the or keys

3 Press the key to enter the OPT F menu

4 Scroll through using the or keys until **START** is displayed

5 Press the key to start SideStep*auto* and exit the OPTF Menu

6 Press the key to exit the menu

NOTE: SideStep*auto* has to be enabled for each Direct Connection using the START option. At any time the user may manually change the frequency using the key

4.14 Transmitter power output

The transmitter supports several power output modes to help you select the optimal settings for your requirements whilst helping to prolong battery life.

Adjusting power output

To adjust the power output:

1 Press the or keys to increase or decrease power output

Boost (Tx-10 only)

Boost allows the Tx-10 transmitter to output its maximum output power. Boost mode can be set to operate for a specified period of time.

To configure boost:

1 Press the key to enter the menu

2 Scroll to the **BOOST** menu using the or keys

3 Press the key to enter the BOOST menu

4 Set the BOOST duration using the or keys. You can choose 5, 10, 15 and 20 minute periods or ON for continuous operation

5 Press the key to accept your changes and exit the BOOST menu

6 Press the key to exit the menu

To enable boost:

1 First configure the boost duration using the procedure above

2 Press and hold the key until **BOOST** appears on the transmitter LCD

3 The transmitter will automatically exit boost mode after the selected duration

To disable boost:

1 Press the key to disable boost

4.15 Transmitter Eco mode

When using alkaline D-Cells in Tx-5 and Tx-10 transmitter models you can extend the effective use of the batteries by enabling Eco mode.

In Eco mode the power output of the transmitter reduces when the batteries can no longer provide the required output power.

When Eco mode is active and the power output has been reduced, the display alternates between 'POWER' and the current output power level.

The transmitter will emit three beeps every time the power is reduced. It will then continue emitting two beeps each minute whilst it operates at a reduced power level.

To enable or disable Eco mode

1 Press the key to enter the menu

2 Scroll to the **BATT** menu using the or keys and enter it by pressing the key.

3 Scroll through the battery options using the or until **ALK** is displayed. Press the key.

4 Use the or until **ECO** is displayed and press the key to enable Eco Mode.

Or

Select **NORM** and press the key to disable Eco mode.

5 Press the key to exit the menu

4.16 Maximum Voltage

On high impedance applications such as small diameter cables, tracer wires, etc, sometimes it can be difficult to get a signal to flow when using the direct connection method. Increasing the output voltage of the transmitter can maximize the amount of signal coupled onto the utility.

The transmitter can operate in either low voltage (30V) or in high voltage (90V). In normal operating mode the transmitter will operate in low voltage mode.

⚠ Warning: When operating the transmitter in high voltage mode, always make sure that the transmitter is switched off when connecting or disconnecting direct connection leads.

To set maximum output voltage to 90 volts:

1. Press the key to enter the menu
2. Scroll to the **MAXV** menu using the or keys
3. Press the key to enter the MAXV menu
4. Set the MAXV to HIGH using the or keys
5. Press the key to accept your changes and exit the MAXV menu
6. Press the key to exit the menu

When in high voltage mode the transmitter will display a high voltage warning triangle.

Each time the transmitter is switched off the transmitter will revert back to the default low voltage setting.

4.17 Measure mode

The transmitter has the capability of providing impedance measurements by determining the resultant impedance across the crocodile clips of the Direct Connection lead while connected to the utility. These measurements can be useful when assessing sheath fault severity. It is also possible to measure potential voltage that may be present on utilities to warn of potentially dangerous or harmful voltages present.

In measure mode the measurement is derived from an AC signal applied to the utility from the transmitter.

Impedance & voltage measurements

1. Connect the Direct Connection leads to the utility and switch on the transmitter.
2. Hold down the key until **MEAS** is displayed and the measuring icon is activated.

   The transmitter display will now indicate the voltage level measured across the connection leads.
3. Press the key once and the display will indicate the impedance measured across the connection leads.

   The measurement icon will display the following symbols:

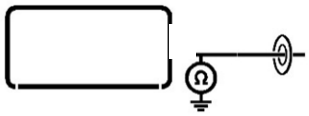

Figure 4.13 Impedance and voltage measurements

4. To exit **MEAS** mode hold down the key until the display reverts back to the normal operating screen.

Impedance measurements using active frequency

1. Connect the Direct Connection lead to the utility and switch on the transmitter.
2. Select the preferred frequency and output the signal.
3. Press the key once and the display will indicate the impedance measured across the connection leads and also the output power of the transmitter.
4. Press the key once to return to the normal operating screen.

Section 5 - Locating cables and pipes

This section introduces the principals and techniques of locating buried cable and pipe utilities with the RD7200 system. For more information on the theory of cable and pipe location, refer to *The theory of buried cable and pipe location* which is available to download from www.radiodetection.com

5.1 Frequencies

The RD7200 locator supports a range of active and passive frequencies.

For a complete list of supported frequencies, refer to the RD7200 Locator Specification datasheet.

Passive frequencies

Passive frequency detection takes advantage of signals that may be present on buried metallic conductors. Dependent on the model, RD7200 locators support up to three types of passive frequencies: **Power**, **Radio and CPS** signals.

You can detect these frequencies without the aid of a transmitter if they are present on the utility you are surveying.

Power Filters™

The RD7200 locator allow you to take advantage of the harmonic signals found on power networks.

When strong or interfering power signals are present, accurate tracing of a target cable can be challenging. Power Filters™ allow you to establish if a single large power signal comes from one source or from the presence of multiple cables. The different harmonic characteristics of the detected lines can then be used to trace and mark their route.

Once in Power Mode, press the key to switch out of Radiodetection's sensitive Power Mode and scroll through the five individual Power Filters.

The use of an individual Power Filter harmonic can also allow you to locate power lines in situations where the total signal would otherwise be too large.

Active frequencies

Active frequencies are applied to a buried conductor using the transmitter. The transmitter can apply a signal using three methods:

Direct Connection

In Direct Connection, you connect the transmitter output directly to the utility. The transmitter will then apply a discrete signal which you can locate using the locator. This is the preferred method of applying a transmitter signal to a utility and in the majority of applications will apply a stronger signal to the utility, which may increase the locate distance.

To directly connect to a non-energized conductive utility:

1 Switch the transmitter off

2 Connect the Direct Connection lead into the transmitter accessory socket

3 Clip the red connection lead to the utility ensuring that the area around the connection is clean and that a positive connection is achieved

4 Clip the black connection lead as far away as possible and at 90° to the ground stake or suitable ground point nearby ensuring that a positive connection is achieved

5 Switch the transmitter On

6 The display will show the Direct Connection lead connected icon

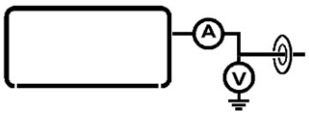

Figure 5.1 Direct Connection lead icon

For more information about other signal connection accessories, refer to Section 8.

⚠ WARNING! Direct Connection to live conductors is POTENTIALLY LETHAL. Direct connections to live conductors should be attempted by fully qualified personnel only using the relevant products that allow connections to energized lines.

⚠ WARNING! The transmitter is capable of outputting potentially lethal voltages. Take care when handling the terminals, connection leads and ground stake, notify other technicians working on the line of the hazard and guard exposed conductors to prevent accidental contact.

⚠ WARNING! Ensure the TX transmitter is switched OFF before making a connection and before disconnection of the direct connection lead to a service.

Induction

In this mode of operation the transmitter is placed on the ground over or near the survey area. If a Direct Connection lead or signal clamp is not plugged into the transmitter, it will automatically go into induction mode. In this mode, only frequencies applicable for induction mode will be made available as the key is pressed.

Once activated the transmitter will induce the signal indiscriminately to any nearby buried conductors.

Please note that these signals will also be airborne and it is advisable to keep the distance between the transmitter and locator at least 10m / 30' – this distance may need to be increased, particularly if depth measurements are taken.

Signal clamp

An optional signal clamp can be connected to the transmitter and clamped around a cable or pipe to apply the transmitter signal. This method of applying the transmitter signal is particularly useful on insulated live wires and removes the need to disconnect the supply to the cable. Clamps are available up to 8.5” / 215mm in diameter.

⚠ WARNING! Do not clamp around uninsulated live conductors

⚠ WARNING! Before applying or removing the clamp around a power cable, ensure that the clamp is connected to the transmitter at all times.

5.2 Choice of frequency for active location

The choice of signal frequency is an important factor for effective tracing and identification of buried lines, and there is no single frequency that covers all conditions. For simple instruments to be used by relatively non-technical personnel, there is no option but to make a compromise, and choose a single frequency high enough to give good performance in the induction mode, but not so high that it will couple too easily into unwanted lines. Active signals between 8kHz and 33kHz are commonly used for these applications. For more comprehensive equipment for problem-solving by technically competent technicians, a range of frequencies may be provided. Typical examples of these and reasons for their use are illustrated below.

512Hz

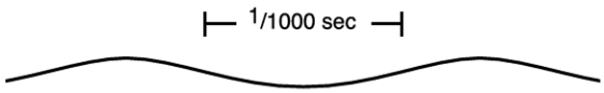

Figure 5.2 512Hz active signal

This low frequency is most useful for line tracing and identification over long distances. It does not couple easily to unwanted lines **however** it is too low for induction, and it falls within the band of power frequency harmonic interference.

8kHz

Figure 5.3 8kHz active signal

This medium frequency is the most useful general-purpose signal, high enough for induction, outside the power frequency interference band, and with limited coupling to wanted lines **however** it may not be high enough to impose a strong signal on small diameter line like telecom cables.

33kHz

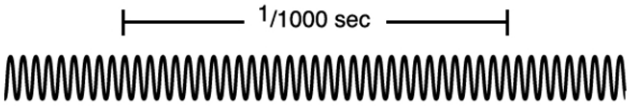

Figure 5.4 33kHz active signal

This higher frequency is easily applied by induction to most lines, so is very useful for initial search. It travels on small diameter line **however** it couples more easily to unwanted lines, and loses its strength over shorter distances than lower frequencies.

100kHz and Over

Figure 5.5 100kHz active signal

This very high frequency range deals with the difficult cases – induction onto small diameter lines in dry sandy soil, and short lengths of cable. It is very easy to apply by induction **however** it couples very easily to unwanted lines, and does not travel far.

Selecting frequencies

It is important to select the correct or appropriate frequency for your particular application. For more information see “*The theory of buried cable and pipe location*”, which is available as a free download from www.radiodetection.com

To select a frequency on the locator:

1 Press the ⓕ key to cycle through available frequencies

2 Alternatively, hold down the ⓕ key and press the ⇧ or ⇩ keys to cycle up or down the range of frequencies

If locating using an active frequency you must also set your transmitter to output the matching frequency.

You can change your transmitter’s output frequency manually using your transmitter’s keypad.

To manually select a transmitter output frequency:

1 Press the ⓕ key to cycle through available frequencies

NOTE: Some frequencies require that you connect an accessory, for example an A-Frame, before the frequency is available.

5.3 Antenna modes

The RD7200 system supports up to four antenna modes, exclusively dedicated to locating cable and pipes, and to suit your particular application or the local environment. These are:

- Peak mode
- Peak+ mode
- Guidance mode
- Null mode

Peak mode

Peak mode provides the most sensitive and accurate mode for location and depth measurement. It provides a sharp Peak response with a corresponding small decrease in sensitivity. Peak mode cannot be disabled using the menu.

In Peak mode the following indicators are displayed by the LCD:

- Depth
- Current
- Signal strength
- Compass

To select Peak mode:

1 Press the key until the Peak mode icon is displayed on the LCD

NOTE: The depth and current values will display automatically, although these values should not be considered accurate until the locator is directly over the target line.

Peak+™ mode

Peak+™ mode combines the accuracy of the Peak bargraph with a choice of Guidance or Null directional arrows.

Guidance arrows provide visual indication of the direction to the target utility, and are designed to get you close to the Peak position faster, before using the Peak bargraph to pinpoint the target utility,

Using Null arrows allow you to check for distortion before marking a point, and should be used when accurate locate measurements are required.

Switching between arrow types:

When in Peak+ mode, press and hold the key to toggle between Guidance and Null arrow types.

You can also select the default arrow type in the locator menu:

1 Press the key to enter the menu

2 Scroll to the **ARROW** menu using the or keys

3 Press the key to enter the ARROW menu

4 Select NULL or GUIDE using the or keys

5 Press the key twice to return to the main locate menu.

When using Guidance arrows:

Use the proportional arrows to guide the locator along the path of the target cable or pipe. To accurately locate the center point of the target utility, for example to mark a point or take a survey measurement, use the Peak bargraph to pinpoint the Peak position.

When using Null arrows:

Use the arrow heads to place the locator above the NULL point. If the Peak response is not at a maximum then this is evidence of a distorted field. If the Peak response is at its maximum level where the Null point is located then there is no or very limited distortion present.

In Peak+ mode the following indicators are displayed by the LCD:

- Right and left arrows
- Signal strength
- Compass
- Current
- Depth

To select Peak+ mode:

1 Press the key until the Peak+ mode icon is displayed on the LCD

Guidance mode

Guidance mode offers good performance in distorted fields and provides three indicators to guide the user towards the target line.

The Left and Right Proportional Arrows become shorter as the locator approaches the target, and the Target Position Needle will move towards its central position. The Signal Strength reading will also reach its maximum value when the locator is positioned above the target.

Any deviation from all three indicators showing the target position in the same location could signal the presence of a distorted field.

In Guidance mode the following indicators are displayed:

- Proportional left and right arrows
- Target Position Needle
- Signal strength
- Gain
- Compass
- Current

- Depth

To select Guidance mode:

Press the key until the Guidance mode icon is displayed on the LCD

Null mode

Null mode is used to verify a locate signal in environments with limited or no interference or distortion. Null mode gives a null response when it is directly over the line.

In Null mode the following indicators are displayed by the LCD:

- Signal strength.
- Compass.
- Right and left arrows.

To select null mode:

1 Press the key until the null mode icon is displayed on the LCD

The sharp, null response can be easier to use than the Peak response but is vulnerable to interference and should not be used for locating, except in areas where there is no interference present.

Guidance Mode offers improved performance in such conditions while Peak+ mode can combine the Peak bargraph with Guidance arrows to combine fast and accurate locate tools.

5.4 Compass

The LCD compass provides a visual indication of the direction of the target cable, pipe or sonde. The compass is available for all frequencies apart from Power, Radio and Passive.

5.5 Trace

Line tracing can be accelerated by switching the locator to Guidance mode.

Move the locator left and right while walking along the path of the line to place the target position Needle directly over the line. As you move the locator over the line, the left and right arrows (and an accompanying tone) will indicate if the target line is to the left or right of the locator.

5.6 Pinpoint

Locating a target line in Peak, or Peak+, mode accurately defines the position of a target line after it has been traced and its position is approximately known. Start with medium output power from the transmitter, medium frequency on the transmitter and locator, and Peak or Peak+ mode on the locator.

Set the locator sensitivity to approximately 50% by pressing the or key

NOTE: it may be necessary to adjust the sensitivity level throughout the pinpointing to keep the bar graph on scale.

1 With the antenna perpendicular to the line, make traverses across the line. Define the point of maximum response.

2 Without moving the locator, turn it round as if it is on a pivot. Stop at the point of maximum response.

3 Hold the locator vertical with the antenna just above the ground and move the locator from side to side across the line. Stop at the point of maximum response.

4 With the end of the antenna close to the ground, repeat steps 2 and 3.

5 Mark the position and direction of the line.

Repeat the steps of the procedure to increase pinpoint accuracy.

If using Peak+ mode, switch to null arrows by pressing and holding the key. Alternatively switch to Null antenna mode.

Move the locator to find the Null position. If the position of the Peak and the Null pinpoints correspond, it can be assumed that the pinpoint is accurate. The pinpoint is not precise if the marks do not correspond, but both marks will show an error to the same side. True line position will be close to the Peak position.

The line lies half the distance to the other side of the Peak position as the distance between the Peak and the Null positions.

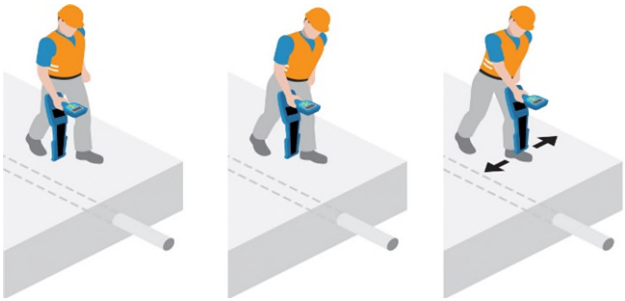

Figure 5.2: Pinpointing a target line

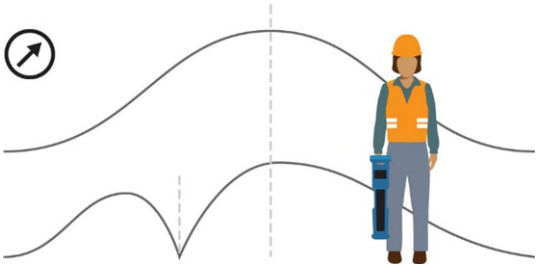

Figure 5.3: Pinpointing with Peak and Null indicators

5.7 Sweep and search

There are a number of techniques available for locating unknown lines in an area. Using these techniques is particularly important before conducting any excavation work to help ensure that buried lines are not damaged.

Passive sweep

A passive sweep is used to locate Power, Radio or CPS signals that may radiate from buried conductors.

To perform a passive sweep:

1 Press the ⓕ key to select the passive frequency you wish to locate. You can select from the following passive frequencies (model dependent):

- Power
- Radio
- CPS (Cathodic Protection System)

2 Adjust the sensitivity to maximum; reduce the sensitivity to keep the bar graph on scale when there is a response.

3 Traverse the area in a grid search, at a steady walk, and hold the locator comfortably with the antenna in line with the direction of movement and at right angles to any lines that may be crossed.

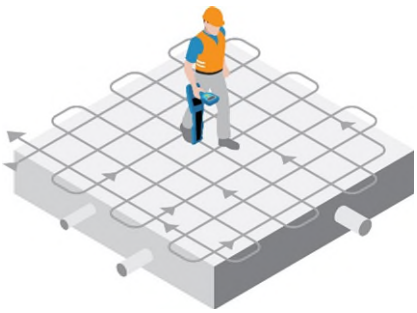

Figure 5.4: Passive sweep

Stop when the locator response rises to indicate the presence of a line. Pinpoint the line and mark its position. Trace the line out of the area being searched. Resume grid search in the area.

In some areas there may be a confusing amount of 50 / 60Hz power signals. Lift the locator 50mm / 2” from the ground and continue the sweep, or use the key to switch from Power mode and use Power Filters to discriminate individual lines.

Switch the locator to Radio Mode. Increase sensitivity to maximum and repeat the above grid search procedure over the area. Pinpoint, mark, and trace out any lines that are located.

In most, but not all areas, radio mode will locate lines that do not radiate power signals and a grid search should be made in both power and radio modes.

Inductive search

An inductive search procedure is a more certain technique for locating unknown lines. This type of search requires a transmitter and locator and two people. This type of search is referred to as a ‘two person sweep’. Before starting the sweep, define the area of search and the probable direction of lines crossing the area. Ensure the transmitter is switched on in induction mode.

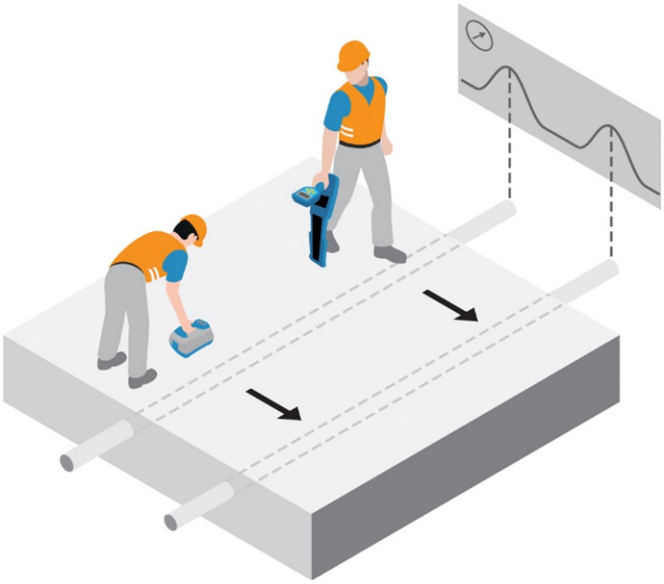

Figure 5.5: Inductive search

The first person operates the transmitter and the second person operates the locator. The transmitter induces a signal onto lines as it passes over them and the lines are then detected with the locator at a suitable distance away from the transmitter (around 15 meters / 50 feet – although this will depend upon the level of induction power used.)

Hold the transmitter with its length aligned with the assumed direction of any lines.

The second person holds the locator at the start of the area to be searched and with the locator antennas at right angles to the probable direction of the buried lines. Set the locator sensitivity level as high as possible without the locator picking up any airborne signals directly from the transmitter.

When the transmitter and locator are in line both operators start to move forward in parallel. The operator with the locator sweeps it backwards and forwards, keeping the locator vertical, as they proceed in parallel with the transmitter. This method allows for misalignment of the transmitter, locator and buried line.

The transmitter applies the strongest signal to the lines directly below it, which are then located with the locator. Move the transmitter from side to side to establish the highest signal which indicates that the transmitter is also directly above the line(s).

Mark the ground at the point of each Peak signal detected with the locator. Repeat the search along any other possible paths of lines. Once the positions of any lines have been marked, reverse positions, place the transmitter over and along each line in turn, and trace the line out of the search area.

5.8 Nulling Out

Sometimes it is possible for some utilities to be masked by other utilities and this can happen when one or more utilities are in close proximity to each other or when stronger signals may radiate. In certain applications and congested areas the 'Nulling' technique allows operators to eliminate the induction signal directly beneath the transmitter but at the same time induces the transmitter signal onto other nearby utilities that previously have not been able to be located

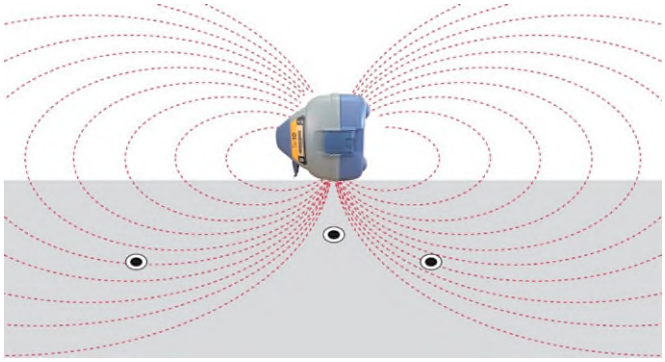

Figure 5.6 Nulling Out effect

Two persons Nulling Out technique:

1. Place the transmitter close to the services you wish to trace (a parallel sweep may be used for this) and using the locator at a distance of approximately 10m/30' from the transmitter, pinpoint the strongest signal.
2. The sensitivity on the locator is adjusted so that the bar graph response is approximately 75%
3. Release the side support arm.
4. With the locator over the centre of the signal the second operator should hold the transmitter at waist level, with the transmitter on its side – release support arm pointing down.
5. The transmitter is then moved from side to side to find the 'Null' spot between two detectable signals; the transmitter should then be lowered towards the ground keeping it in the 'Null' spot.
6. At ground level we are ideally looking for a 'Null' no wider than 50mm/2" (Sensitivity on the locator may need to be adjusted to achieve this).
7. With the transmitter left on the ground in the 'Null' spot. The locator is used to check for additional signals either side of the 'Nulled' signal.
8. Should the ground be uneven the transmitter may be turned across the line of the service provided the release support arm remains facing downwards. (this will improve the stability of the unit)

One person Nulling Out technique:

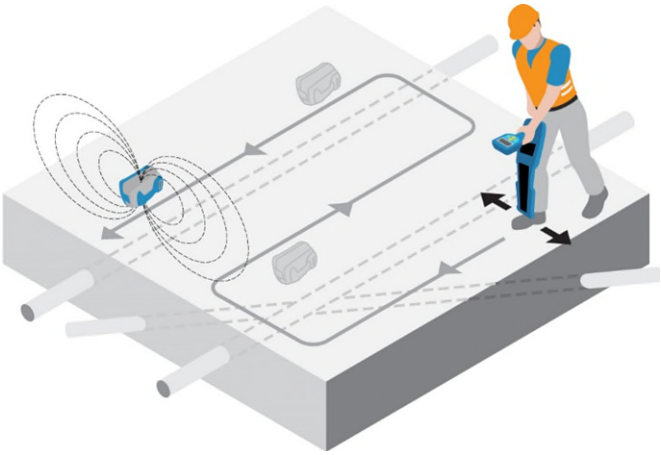

Figure 5.6 Nulling Out - Single person sweep

1. Lay the transmitter on its side using the side support arm.
2. Sweep the area around the transmitter with the receiver at least 10m/30' from it.
3. Reposition the transmitter at 5m/15' intervals around the area and repeat step 2
4. Stop when there is a response
5. Pinpoint and mark any lines
6. Trace the lines out of the area

Section 6 - Depth and current readings

6.1 TruDepth™

The RD7200 locator provides automatic depth of buried cables, pipes and sondes and when the locator is correctly orientated above the target line or sonde.

Current readings are also displayed simultaneously if the locator is orientated correctly (feature not available in sonde or passive frequency modes).

Depth and current readings are automatically displayed simultaneously, but if the locator is not correctly orientated neither reading will be displayed.

Depth range and accuracy vary depending on the makeup and type of target utility (e.g. cable, pipe or sonde), its depth and external environmental factors like electromagnetic noise, ground conditions and interference.

⚠ WARNING! The accuracy of depth measurement is subject to a number of factors and is meant as a guide only. Never use the depth measurement to define mechanical digging depths. Always follow local safe digging guidelines.

The depth measurement is to the center of the pipe, cable or sonde. The best readings are typically detected from 'active' signals output by a transmitter rather than from passive sources.

The RD7200 locator is capable of determining cable depth when locating some passive power signals. However passive signals on lines are less suited for measuring depth because accuracy can be compromised by interference - e.g. due to the passive signal being present on more than one line.

⚠ WARNING! Do not make depth measurements near bends or tees in the line. Go at least 5m (16ft) from a bend for best accuracy.

TruDepth for buried conductors or sondes

TruDepth and Compass

It is important to note that the RD7200 locator will only display depth and current (in applicable modes) when the locator is correctly orientated above the target line, cable or sonde. To ensure the locator is correctly orientated, use the Compass feature.

When locating lines, make sure the Compass display is in the North / South orientation position.

When locating sondes (see Section 8.5), make sure the Compass display is in the East / West orientation.

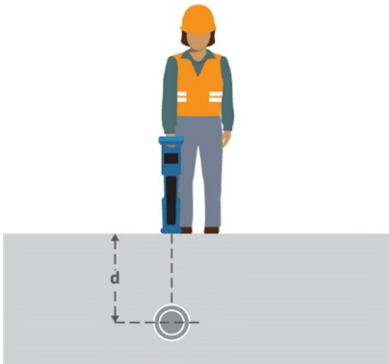

Figure 6.1: Taking a depth reading

To minimize signal distortion, do not apply the signal by induction. If Direct Connection or signal clamping is not possible, place the transmitter in induction at least 15m (50ft) from the point of any depth measurements.

Depth measurements may not be accurate if there is audible interference or if part of the transmitter signal has coupled to a nearby line.

Confirming the Peak position coincides with a Null position indicates that the position is suitable for making a depth estimate.

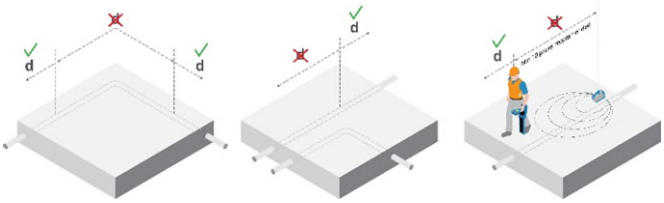

Figures 6.2: Depth readings

- Pinpoint the target line accurately with the locator
- Check the locator is directly over the line, the antennas are at right angles to it and the locator is vertical. Adjust the sensitivity level to bring the bar graph indication to approximately 50%

If the ground appears to radiate a strong field, perhaps near a radio station, check depth by holding the bottom of the antenna 50mm (2") above the ground and subtract this reading from the indicated depth.

6.2 Verifying depth measurements

Check a suspect or critical depth reading by lifting the locator 50mm (2") above the ground and repeating the measurement. If the measured depth increases by the same amount it is a good indication that the depth reading is correct.

When locating for a conductor or sonde, depth measurements should be precise to ±3% if conditions are suitable. However, you may not always know if the conditions are suitable so the following techniques should be used to check critical readings:

- Check that the route of the line is straight for at least 2 meters (6 ft) to either side of the measurement point.
- Check that the signal response is reasonably constant over the 15-meter distance to the transmitter and make depth measurements to either side of the original point.
- Check that there are no adjacent lines carrying a significant signal within 1 to 2 meters (3 to 6 ft) of the target line. This is the most common source of error of depth measurements as a strong signal coupled to an adjacent line can often introduce ± 50% error.
- Make several depth measurements at points slightly displaced from the line's apparent position. The shallowest indication will be the most accurate and will also indicate the line's position most accurately.

Checking depth accuracy

This paragraph describes several quick and easy ways of verifying that the depth reading on the locator when used for markers or conductors and sondes is within acceptable limits.

Refer to this if you are getting inaccurate depth readings from a cable or pipe for which you know the approximate depth. Inaccurate depth readings could be the result of the locator picking up a stronger signal such as another cable or pipe running in close parallel to the target pipe or cable.

There are two ways of checking the calibration of the locator in the field. Both methods require the use of a transmitter:

Method 1

Place the transmitter on top of a non-metallic object, 18" / 500mm in height or more, on the ground and away from any buried lines. Switch the transmitter on in induction mode. Hold the locator with the blade horizontal and pointing towards the front of the transmitter and approximately five meters from the front of the transmitter.

1 Switch the locator on.

2 Select the same frequency as is selected on the transmitter but make sure that this frequency is in the sonde mode.

3 Move the locator from left to right and when the bargraph reading is at its Peak note the depth as indicated on the locator. Measure the distance from the base of the locator to the center of the transmitter using a tape measure.

4 Compare this reading with the depth reading on the locator.

The locator can be considered accurate if the difference between the depth reading on the locator and the distance measured with the tape is less than 10%.

Method 2

1 Apply a signal to a cable or pipe of known depth.

2 Locate the cable or pipe; the locator will display depth on the LCD automatically.

3 Compare the depth reading on the locator with the actual depth.

NOTE: The accuracy of depth measurement is subject to a number of factors and is meant as a guide only. Exercise caution when performing any excavation.

6.3 Current readings

Identifying a utility using current measurements

Measuring current value on a line helps confirm the identity of the line and may provide information about the condition of cable insulation or pipe coating.

About current measurements

The transmitter applies a signal or current onto a target line. The current decreases in strength as the distance from the transmitter increases. This rate of decrease depends on the type of line and on soil conditions. Regardless of the type of line and the frequency being used the rate of decrease should be regular with no sudden drops or changes. Any sudden or abrupt current change indicates that the line or its condition has changed.

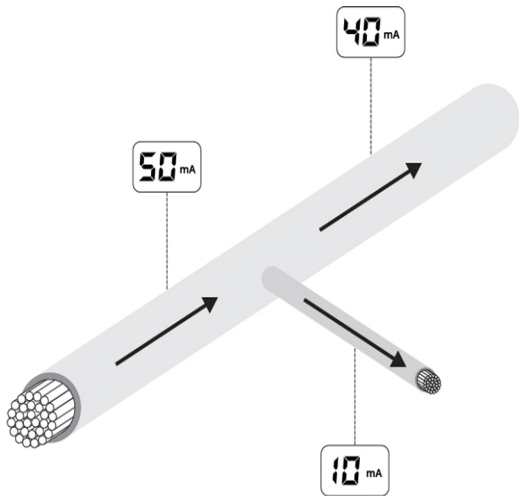

Figure 6.3 Current readings

In congested areas, where there is more than one line, the locator may sometimes detect a stronger signal from an adjacent line to which the signal has coupled or shares common grounding because it is nearer the surface. Although current measurement compensates for depth, signal response will be less as the depth increases.

The line with the highest current measurement, rather than the line giving the strongest response, is the target line to which the transmitter signal has been connected.

Measuring current provides useful information about the position of bends and intersections. Measuring current after a tee will indicate the main line that pulls more current along its greater length.

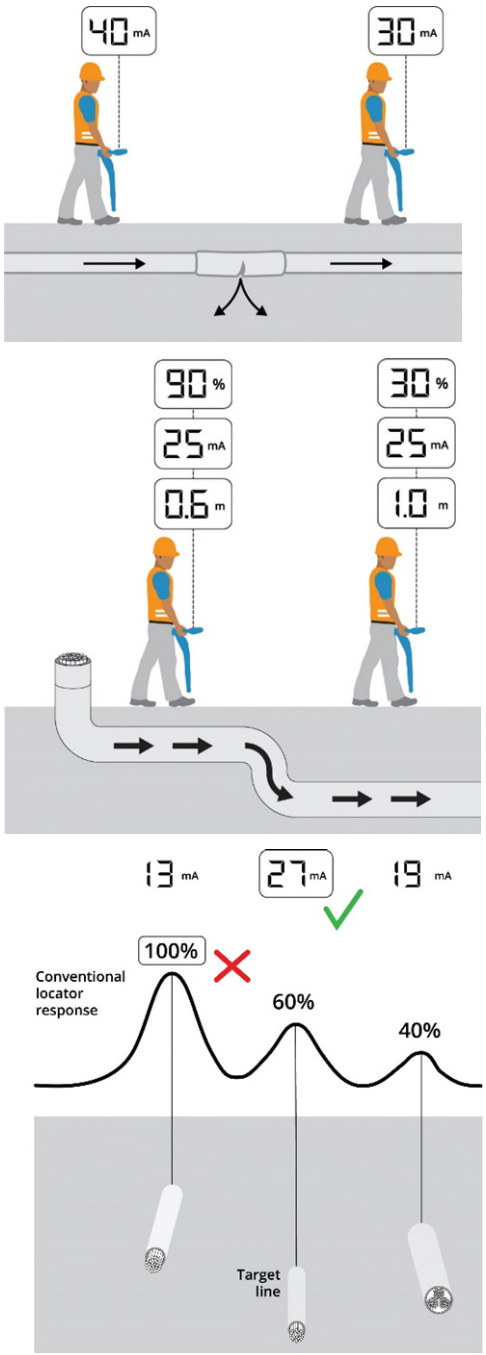

Figures 6.4 – 6.6 Taking current readings

Applying a transmitter signal

The transmitter signal can be connected, clamped or induced to the target line in the same way as the signal for line tracing is applied.

⚠ WARNING! Direct Connection to live conductors is POTENTIALLY LETHAL. Direct Connections to live conductors should be attempted by fully qualified personnel only using the relevant products that allow connections to energized lines.

Signal current measurements

Pinpoint the line and confirm the accuracy of the Peak pinpoint with null arrows. Check the locator is directly over the line, with the antennas at right angles to it and vertical.

The locator will automatically estimate and display depth on the LCD.

A signal coupled to a nearby line may distort the accuracy of the measurement. If the accuracy of the reading is suspect, sweep the area to check if other nearby lines are radiating the signal. If other signals are causing interference, it may be necessary to make the current measurement at another point along the line.

Both antennas are needed to make a current measurement and locator accessory antennas such as a normal clamp or stethoscope cannot be used. Because current measurement is a function of depth, it is only available in active locating modes.

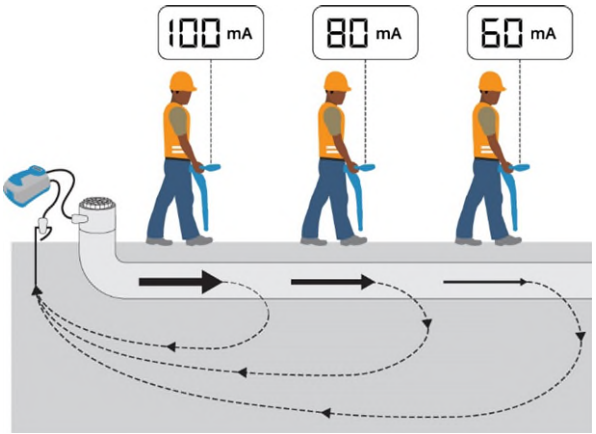

Figure 6.7: Current readings using transmitter signals

Section 7 - Locating techniques

7.1 Identifying target utilities

Induction

If several conductors are running in parallel, and it is not possible to connect a transmitter, each line may be located separately. Proceed as follows:

1 Perform a sweep of the area to find the position and number of conductors in the area.

2 Map the direction in which the conductors are going.

To trace the lines:

1 Select induction mode on the transmitter.

2 Select the same frequency as on the locator.

3 Place the transmitter on its side and in line with a conductor

4 Ensure the conductor is directly below the transmitter

5 This will 'null out' the signal directly below the transmitter, placing no signal on that conductor, and enable the other conductors to be located

6 Locate each conductor and mark its position

7 Move the transmitter down the route and continue locating and marking.

8 Trace each conductor out of the search area until the target can be accurately located.

Unwanted signal coupling

Unwanted coupling of the signal from the target line to another nearby line is one of the most common location problems. It leads either to an error in the marked position and depth of the target line or to marking the wrong line. A certain degree of coupling is unavoidable in many situations but there are ways in which a careful user can reduce coupling and increase location reliability.

- Avoid applying the signal by induction. The signal may be coupling to more than one line directly from the transmitter. Use the signal clamp where possible.
- Identify points where lines may be bonded or in close proximity to each other. Work toward these points rather than away from them. For example, if gas and water pipes are bonded within a building, apply the signal at the valves or access points in the road rather than in the building.
- Reduce coupling to a parallel line by using a low signal frequency where available
- Return signal flowing on another line. Use a double-ended connection to by-pass the ground return if possible
- Choose a signal application point where the line is furthest from other lines and not in a congested area
- When using single-ended connection, site the ground stake as far from the target line as possible and away from other buried lines
- Avoid using existing structures for ground connections; other buried lines may be bonded to them
- A bad ground connection or just laying the ground lead on the surface at right angles to the line may result in less coupling than a good ground provided long distance tracing is not required.

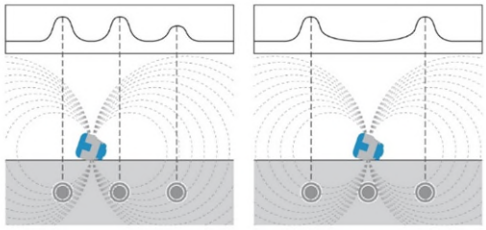

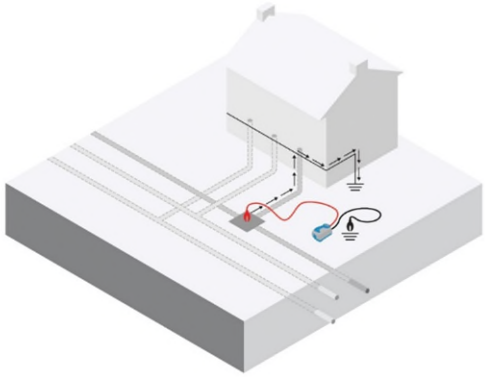

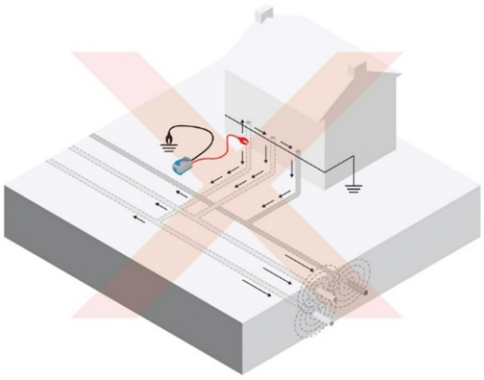

Figures 7.1 – 7.4: Nulling utilities & interference from services

7.2 Signal & ground connection

Manhole covers

Sometimes when locating, it is not possible to insert the ground stake into the earth, for example, when locating on hard ground such as roads. In this case, the ground return can be made by attaching the ground lead to the metal frame of a manhole.

Using lighting columns

Direct Connecting to a metal, street-lamp column is almost as effective as connecting to the cable sheath itself. Normally the cable sheath is bonded to the metal column, therefore a simple connection onto the column enables the user to locate the street lighting quickly and safely without having to call out a technician from the lighting company.

If the lighting column is made from concrete make the transmitter connection to the cable sheath unless the cable is earthed to the inspection doorframe. Connection to the cable sheath applies the transmitter signal for a considerable distance enabling the locator to trace cables feeding illuminated street furniture as well as other street lights.

⚠ WARNING! The live cable connector is for use only by operators licensed or permitted to work on live cables.

The use of a street light column as a means of applying a signal to other power cables on the same electric circuit is a possibility. The signal may be weak using this method because it may have travelled some distance back to the sub-station and out again on the other system. With the locator used on a high sensitivity setting it is often possible to locate a cable, which would otherwise have been difficult or inconvenient to energize with the transmitter signal.

Finding a good ground point

When using a Direct Connection, it is important to get the best possible grounding for the transmitter. This provides the lowest resistance ground path and the best output signal. If it is not possible to use the ground stake the following are examples of good alternative ground points:

- Metal manhole covers
- Metal drainage grates
- Metal railings
- Metal fence posts

7.3 Double-ended connections

Large diameter water pipes and gas distribution pipes that are laid in sections sometimes have insulated joints between the sections and can be difficult to locate using a single ended connect. This is because when using a single ended connection ground return, signals can often cause confusion by returning to the transmitter along other lines. The problem sometimes occurs when return signals appear stronger than on the target line, usually because the target line is deeper than the line carrying the return signal, or the return path may be a better electrical conductor than the target line.

Applying a double-ended transmitter connection is a useful technique for positively tracing and identifying a target line in a situation such as a heavily congested industrial site, provided there are access points at each end of the line.

Making a double-ended connection

Connect the transmitter to an access point on the target line. The transmitter ground is connected with a long cable to another access point further along the line. A complete circuit is achieved without using ground as a current return path. The long cable should be kept as far away as possible from the expected route of the line.

This method of applying the transmitter signal is ideal for positive identification of a target line. When a connection has been made to two points on the same line, the same level of current should be detectable around the circuit. The locator display should remain constant if the depth of the line does not change.

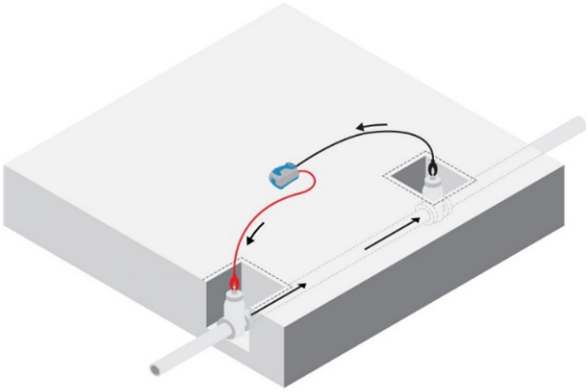

Figure 7.5: Making double-ended connections

Section 8 - Fault-finding

8.1 About fault-finding

The RD7200 locator is capable of locating cable to ground faults caused by damaged cable sheaths and can also be used to locate damage to insulation on pipelines. This process is known as Fault-Finding and uses specific fault find signals applied to the target.

Fault find signals can only be applied using Direct Connection method.

The A-frame accessory is used to locate cable sheath faults on power and telecom cables or insulation faults on pipelines. To use Fault-Find you will need the following equipment:

- RD7200 locator
- Tx-5 or Tx-10 transmitter
- Accessory A-frame with connecting lead
- Direct connection lead and earth stake

There are 2 types of signals that can be used for fault finding:

- 8K Fault Find – useful for sheath faults on cables but can also be used on pipelines over shorter distances.

8.2 Preparation

Using RD7200 standard locating techniques locate the cable or pipe for a short distance and trace and mark its route. Remove all earth bonds from the line to be traced during the fault-finding survey. If there are any earth bonds along the path the fault find signal may direct the user to this location as this will be the preferred path for the fault find signal to leak away into the ground and may result in the fault not being located.

Connecting the transmitter

1 With the transmitter switched off connect the Direct Connection lead into the transmitter accessory socket

2 Clip the red connection lead to the cable, cable sheath or pipe ensuring that the area around the connection is clean and that a positive connection is achieved

3 Extend the black connection lead as far away as possible at 90° to the probable route of the target cable and clip the connector to the ground stake ensuring that a positive connection is achieved

NOTE: Always connect the black connection lead to a ground stake and not a water pipe or buried cable, as these may carry the signal.

Reference readings

It is good practice to obtain a reference reading from the ground stake before you attempt to locate a fault on a target line. Reference readings help to provide the following information:

- Severity of fault
- Survey interval

Before taking the reference reading set up the transmitter and locator as follow:

On the transmitter:

1 Select a fault-finding frequency using the ⓕ key

2 Use the ⇧ or ⇩ keys to increase or decrease the output signal level

3 If required, you can use the BOOST setting if the fault is located on a high resistance cable or if the cable is long

⚠ WARNING! By selecting 8KFF the transmitter will have the ability to output high voltages and a high voltage warning icon will appear on the transmitter's LCD.

On the locator:

4 Connect one end of the connection lead to the A-frame socket

5 Connect the other end to the locator accessory socket

6 The locator will automatically recognize the A-frame and display the A-frame icon on the LCD

7 Select a fault-finding frequency using the ⓕ key

Obtaining a reference reading:

Position the locator approximately 2m (6 feet) from the ground stake and push the A-frame spikes into the ground with the green spike towards the ground stake

Attach the locator to the A-frame by the retention hook. (If you are holding the locator separately, make sure that the locator is in line with the A-frame and is pointing towards the green spike.) The fault direction arrow should be pointing away from the ground stake. If it is not, make sure that the transmitter is connected correctly (red connector to the cable and black to the ground stake).

Take the dB reading and keep it for reference. If there is a single fault on the cable, it will be approximately the same dB value as the reference reading.

NOTE. To establish how often to take readings on the cable or pipe, move away from the ground stake and take further readings until the arrow has difficulty in locking and the dB reading is low. Measure the distance that the locator is now away from the ground stake. This is the distance that you can safely use between taking readings on the cable or pipe to ensure that you do not miss the fault.

8.3 How to find a fault

Starting from the transmitter, walk along the cable or pipe route pushing the A-Frame spikes into the ground with the green spike pointing away from the transmitter. Where there are no faults the dB reading will be low and the direction arrow may flicker forward and back.

NOTE: Flickering arrows may also indicate that you may be too far away from the fault or ground stake (or both) for the locator to lock on.

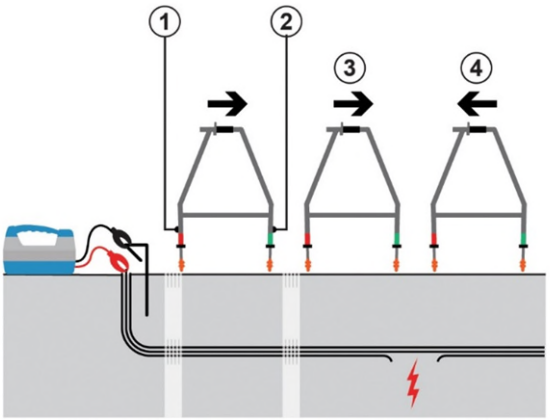

Figure 8.1: Cable sheath fault-finding

If you are trying to locate high resistance faults or there is a long distance between faults, carry on with the survey and the locator will lock on when you get closer to the fault.

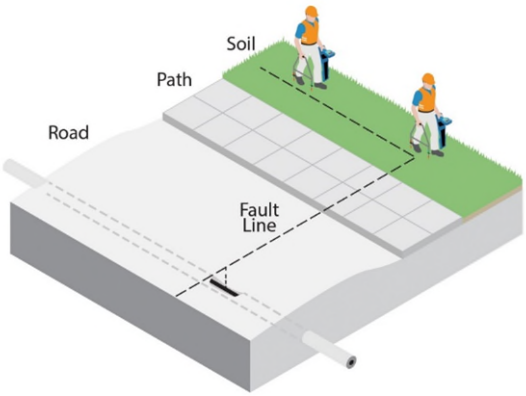

Figure 8.2: Locating faults with the locator and A-frame

Take readings at the survey intervals determined by the reference reading. To locate the cable or pipe while using the fault find signal during a Fault-Find survey, press the key once and the locator will switch to Peak locate mode. To use alternative antenna modes, press the key to step through available antenna modes. To get back to fault find mode step through all available antenna modes until the locator goes back to fault find mode.

Note: While the A-Frame is connected to the locator, depth and current measurements will not be available. If depth or current measurements are required, remove the A-Frame lead from the locator.

As a fault is approached the Fault-Find direction arrow will lock on to the fault signal, point forward and the dB readings will increase. When the fault is passed the arrow will point back towards the transmitter. Take readings at smaller survey intervals to determine the exact point of the fault.

When the A-frame is directly over the fault the dB reading will drop as shown opposite.

NOTE: The values given are for illustration purposes only and may not be the same as those obtained in other situations.

To pinpoint the fault, turn the A-frame 90° to the cable or pipe and Fault-Find until the exact point is found. Where the arrow direction changes the center line of the A-frame is now directly over the fault.

Mark the ground to show the position of the fault. Find the maximum dB reading in front of the fault by pushing the A-frame into the ground at small intervals. Note the dB reading. If the reading is approximately the same as the reference reading, you can assume that there is only one fault. If the reading is less than the reference reading, keep surveying the cable for other faults.

NOTE: If the cable or pipe runs under a road, use the equipment as normal on the road surface as it can sometimes detect signals when working on blacktop, concrete, or paved surfaces. If necessary, try wetting the road surface. Pouring a very small amount of water around the bottom of the A-frame spikes before each Fault-Find will generally ensure a good ground connection.

NOTE: If the cable or pipe runs under a paved surface, the fault can often be pinpointed by fault finding in the grass / soil adjacent to the paving. Reduce the distance between placing the A-frame spikes in the ground to allow for the increased distance to the actual fault position.

Section 9 - Using accessories

9.1 About accessories

Both the transmitter and locator are compatible with a wide range of accessories.

When an accessory is connected, the locator or transmitter will recognize it and will enable the mode appropriate to the accessory. For example, attaching an A-Frame to the RD7200 locator will automatically switch the locator to fault-find mode and limit the number of available frequencies to those that are compatible with the A-Frame. The LCD will also display an icon of the accessory and will remove any nonessential icons from the screen.

Radiodetection supply an accessory sheet with pictures and details of all applicable accessories which is available on www.radiodetection.com

For a full list of supported accessories that are available for purchase, refer to the appendix

9.2 Headphones

Radiodetection supplies an optional headphone set for the RD7200 locator. The headphones feature an adjustable headband to ensure a tight fit when used in the field. The accessory headphones also feature volume adjustment for both left and right speakers.

Connect the 3.5mm headphone jack into the locator's headphone socket, which is located next to the accessory panel.

⚠ WARNING! Before wearing headphones, lower the locator's volume levels to help prevent damage to your hearing.

⚠WARNING! Wearing headphones may impede your awareness to dangers in the field such as moving traffic or other heavy machinery. Exercise caution!

9.3 Locator clamps

A locator clamp is used to positively locate and identify a cable when several cables are running close together.

A target cable can be identified in a chamber, on a tray or other access point by fitting a clamp to the locator and examining each cable in turn. Signal strength response shown on the locator display should be noted for each cable.

When to use clamps

Clamps can be used where:

- Several cables or pipes run in close proximity to each other.
- A cable or pipe is accessible at an inspection hole or manhole.

Connecting a clamp

1. Put the clamp connector into the accessory socket on the front of the RD7200 locator.
2. Place the clamp around the pipe or cable and switch the locator on.
3. Set the frequency to the same as that on the transmitter.
4. Put the clamp around each cable in turn and note the bar graph response. Compare the strength of response from each cable. The cable with a substantially stronger response than the others will be the cable to which the transmitter signal has been applied.

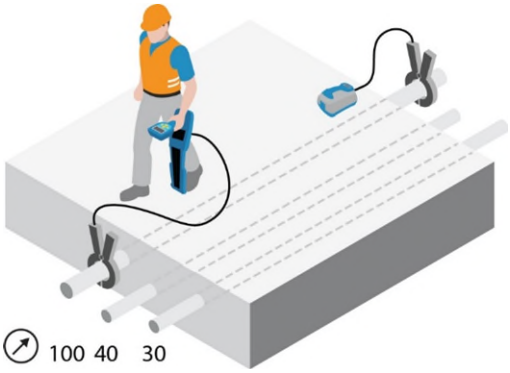

Figure 9.1: Connecting clamps

To ensure that the target cable has been correctly identified, reverse the positions of the transmitter and locator and check that the strongest response is still received from the target cable by the locator in its new position.

Locator clamp range

Standard clamps

The clamp plugs into the locator accessory socket and is used for cable identification at points where the cable can be accessed. The standard clamps are suitable for cables up to 130mm (5¼") diameter.

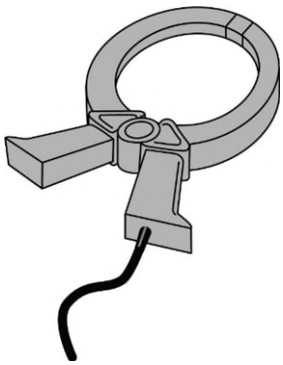

Figure 9.2: Standard Clamp

Small clamp

The small clamp performs the same function as the standard clamp but is useful in cramped situations where there is insufficient access for the standard clamp.

The small clamp is suitable for cables up to 50mm (2”) diameter.

9.4 Transmitter clamps

The transmitter clamp fits around a pipe or cable and safely applies a signal to a live insulated cable without interrupting or disconnecting the supply. The clamp applies a very discriminating signal to a target line with reduced coupling to other lines. A clamp can sometimes be a more effective method of applying the signal than Direct Connection.

The target line will carry the strongest signal. The other lines will carry the weaker return signal. If the system comprises only two conductors, they may carry equal signals.

⚠ WARNING! Do not clamp around uninsulated live conductors

⚠ WARNING! Before applying or removing the clamp around a power cable, ensure that the clamp is connected to the transmitter at all times.

The clamp may buzz or vibrate if it is placed around a power cable that has significant net current flow. This is normal and does not harm the equipment.

Connecting the clamp

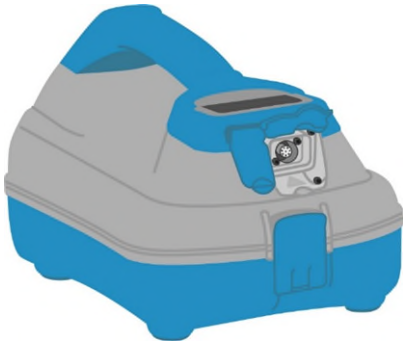

Figure 9.3 Transmitter output socket

7 Plug the clamp into the transmitter output socket.

8 Put the clamp around the pipe or cable and ensure that the jaws are closed. Switch the transmitter on.

The display will show the Clamp connected icon

Figure 9.4 Clamp connected icon

The line should be grounded (earthed) on each side of the clamp for the signal to transfer to the line. Ground the line if necessary. An insulated cable may be traced even if it has no actual ground connection, providing a reasonable length is buried either side of the clamp to provide capacitive coupling to ground (earth).

NOTE: It is not necessary to make a ground connection from the transmitter when using the clamp.

Transmitter clamp range

Although transmitter and locator clamps look the same, they have different internal windings. To prevent the wrong clamp being connected, transmitters and locator clamps have plugs of a different orientation.

Standard signal clamps

The standard clamps apply the transmitter signal very selectively and effectively to a target cable up to 130mm (5¼”) in diameter using frequencies from 8kHz to 200kHz.

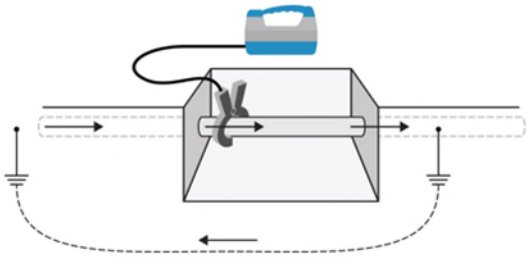

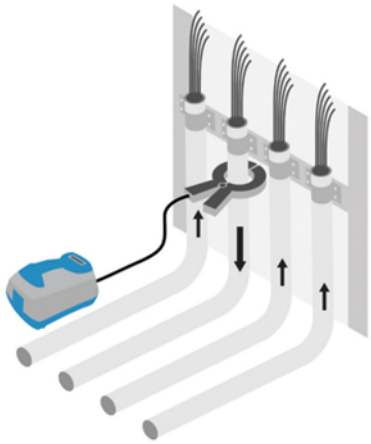

Figures 9.5 – 9.6: Connecting transmitter clamps

The standard and small clamps have a double spring action for positive toroidal contact.

⚠ WARNING! . The transmitter must only be connected to live services using the appropriate accessory such as a plug connector or live cable connector.

9.5 Transmitter external power supply

The external Mains or vehicle power supplies provides an alternative and convenient method of powering the transmitter.

⚠ WARNING!. The mains power supply rating are: 100-240VAC, 1.3A. Always use an adequately rated detachable mains lead.

⚠ WARNING!. The mains power supply is not IP rated and should not be used in wet locations

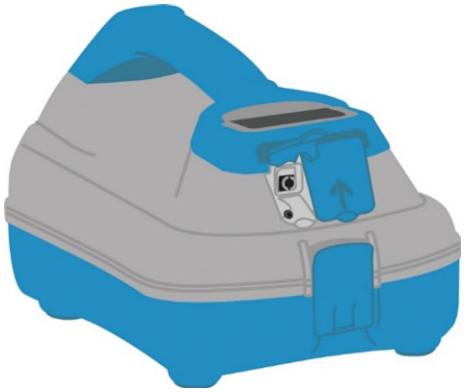

Figure 9.7: Transmitter DC Input

To use the mains or vehicle power supply units connect them to the DC input socket in the transmitter before connecting them to the mains or vehicle supply socket.

⚠ WARNING! The mains PSU supply cable is the disconnecting method for isolating the unit from the main supply.

⚠ WARNING! The battery compartment lid is the disconnecting method for isolating the unit from the battery supply.

⚠ WARNING! Do not position the equipment so it is difficult to disconnect the unit from each supply.

⚠ WARNING! Protection will be impaired if used in a manner not specified

9.6 Sondes

Sonde overview

A sonde is a self-contained battery operated transmitter used for tracing the paths of pipes, ducts, sewers and drains and in the precise location of blockages or collapses. The sonde can be fitted to a flexible rod for insertion or pushing through pipes etc. and the smaller diameter sondes can be used in conjunction with jetting machines and blown through the duct. A suitable Radiodetection locator can then be used to locate the sonde. Check that your locator features sonde locating before starting.

Choosing a suitable sonde

Radiodetection offers a wide range of sonde to suit most applications: From the ¼" / 6mm diameter S6 33kHz microsonde which, with a range of 6.6" / 2m, targets fiber-optic micro ducting or other small non-conductive pipes, to the 33kHz Super Sonde, which with a depth range of 50 feet / 15m targets deep sewer pipes.

Consult the precision locate accessory range brochure or web page on www.radiodetection.com for a full list of all available sondes and their technical specifications.

Check that the sonde has sufficient range for the application and is dimensionally small enough and sufficiently robust for the application. Ensure that the frequency of the sonde corresponds with the locator frequency; the locator will not locate the sonde unless the frequencies are the same. Sondes are marked with their transmitting frequency. Ensure that the means of propelling the sonde is available together with the correct fittings and couplings.

Preparation

Insert a new battery into the sonde. A new battery or a freshly recharged battery should be used at the beginning of each day and preferably at the start of each new job.

Before inserting the sonde, check that the sonde and locator are at the same frequency and working correctly. To do this, place the sonde on the ground at a distance from the locator that is equal to the rated depth of the sonde. Point the locator at the sonde with the antenna in line with the sonde (the opposite of using the locator to locate a line) and check that the bargraph reading exceeds 50% at maximum sensitivity.

Propelling a sonde

Sondes have a thread at one end for connecting to drain rods, or to other devices for inserting and propelling the sonde along a drain or duct. Sondes may be floated along drains at the end of a tether and floats are available for fitting to the sewer sonde and super sonde. Sondes can be strapped to high-pressure water jets or similar devices used for cleaning, maintaining and inspecting drains. Sondes used in underground drilling and boring operations are normally housed in the boring or drill head behind the boring or drill bit.

Locating and tracing a sonde

Insert the sonde in the drain or duct access and locate it while it is still just in view at the drain or duct entrance. Hold the locator vertical directly over the sonde with the antenna in line with the sonde. Adjust the locator sensitivity so the bar graph reads between 60% and 80%.

The sonde radiates a Peak field from the center of its axis with a ghost signal at each end of the Peak. Move the locator a little way behind and then in front of the axis of the sonde to detect the ghost signals. Finding the two ghost signals positively confirms the locate. Reduce the locator sensitivity to lose the ghost signals but still indicate a clear Peak response directly over the sonde. Locator sensitivity is now set for tracing the duct or drain unless the distance between sonde and locator changes.

Propel the sonde three paces along the drain or duct and stop. Place the locator over the supposed position of the sonde. Do not adjust the sensitivity level.

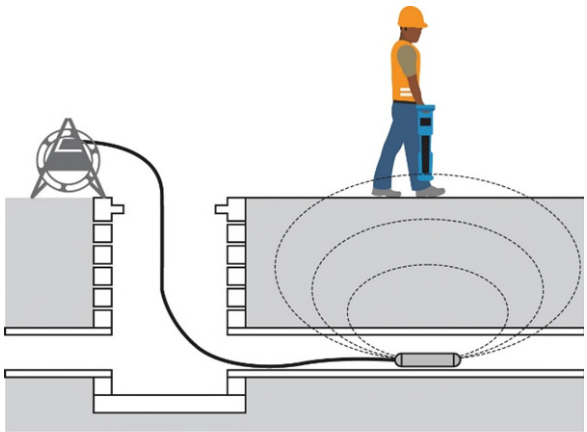

Figure 9.7 Sonde deployment

To locate a sonde:

1 Move the locator backwards and forwards and stop when the bar graph indicates a Peak. You can use the LCD compass to orient the blade of the locator with the direction of the sonde.

2 Rotate the locator as if the blade is a pivot. Stop when the bar graph indicates a Peak.

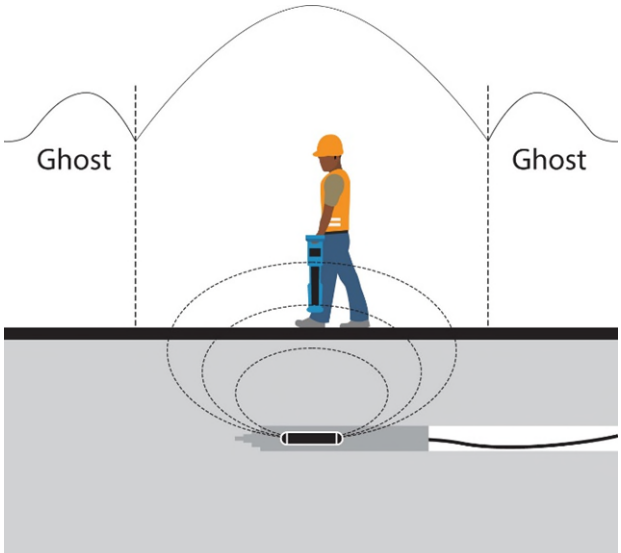

Figure 9.8 Locating a sonde

3 Move the locator from side to side until the bar graph indicates a Peak.

4 Repeat 1, 2 and 3 with the antenna vertical and resting on or just above the ground. The locator should then be directly above the sonde with the antenna in line with it. Mark the position of the sonde and its direction.

5 Propel the sonde a further 1 or 2 meters, pinpoint, and mark the position. Repeat this pinpoint procedure at similar intervals along the line of the drain or duct until the survey is completed.

Checking sonde depth

The RD7200 locator will automatically display the depth of a located sonde providing the locator is correctly oriented and positioned above the sonde. Using the LCD compass as a guide, rotate the locator until the compass indicates the sonde is in East / West position.

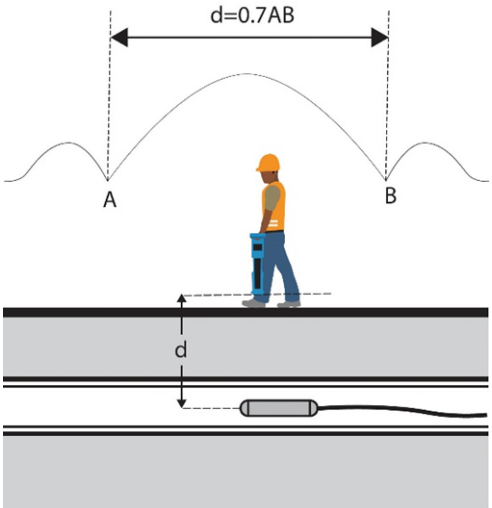

Figure 9.9: Calculating sonde depth

Calculation method

Pinpoint the sonde. Move the locator in front of the sonde and still with the antenna in line with it, increase sensitivity to find the Peak of the ghost signal. Move the locator to behind the sonde ensuring that the locator blade is always in line with the sonde. Find the null positions A and B (See Figure 8.10). Measure the distance between them and multiply by 0.7 to give an approximate depth measurement.

Flexitrace

The Flexitrace is a traceable plastic covered fiberglass rod incorporating wire conductors and is used for locating small diameter, non-metallic pipes to a depth of 3 meters. The Flexitrace can be inserted into a pipe or duct as small as 9mm / 3/8” internal diameter, and it has minimum bend radius of 250mm. Batteries are not required, as the FlexiTrace is powered by any Radiodetection transmitter.

The FlexiTrace has a maximum power rating of 1W. When using the FlexiTrace with a Radiodetection Tx-5 or Tx-10 transmitter the output limit must be set to 1W in the MAX P menu and the output voltage limit set to LOW in the MAX V menu.

⚠ WARNING! Failure to follow the Tx-5 or Tx-10 instructions above may result in the tip of the FlexiTrace becoming too hot to touch, resulting in risk of personal injury and damage to the equipment.

The FlexiTrace can be used in two modes: Sonde mode or Line mode. In sonde mode only the tip of the FlexiTrace is energized whilst in line mode its whole length is energized.

To use as a sonde, connect both transmitter leads to the FlexiTrace stud terminals. As the FlexiTrace terminals are not color coded it does not matter to which terminals the leads are connected. To use the FlexiTrace in line mode, connect the red transmitter lead to one of the FlexiTrace terminals and connect the black transmitter lead to a suitable ground connection.

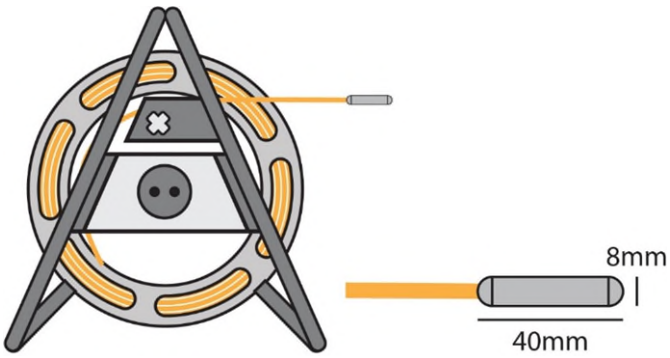

Figure 9.10: FlexiTrace

9.7 Stethoscopes

When to use a stethoscope

At times, it may not be possible to put a clamp around a cable because of congestion or because of inaccessibility. A stethoscope antenna should be used in place of a clamp to identify the target cable(s).

How to use a stethoscope

Plug the stethoscope into the locator accessory socket. Press the concave head against each cable in turn to detect a maximum signal.

Stethoscope range

Large stethoscope antenna

The large stethoscope antenna, which plugs into the locator accessory socket, is used for cable identification in situations where the cable is exposed. It is particularly useful for identifying heavy cables lying in a tray where it is not possible to fit a clamp. The concave detector head on the end of the insulated, flexible gooseneck is placed firmly against the cable to be identified. If there are a number of cables, the stethoscope antenna will give the strongest response from the cable to which the transmitter signal has been applied.

Small stethoscope antenna

The small stethoscope antenna has a 25mm (2”) concave head at the end of a 2m (6½ ft) lead. The small stethoscope can be screwed into an extension rod or used at the end of several extension rods joined together for identifying inaccessible small cables.

Miniature hi-gain stethoscope

The miniature stethoscope is similar to the small stethoscope but has no handle or facility for extension rods.

The miniature stethoscope can also be used as a miniature antenna for locations where the bulk of the locator makes it inconvenient for use, such as locating pipes or cables in walls.

9.8 Submersible antenna

When to use a submersible antenna

Tracing buried pipes and cables across waterways and estuaries are frequent and critical locating applications. Less frequent but equally important is tracing and locating lines between the mainland and offshore islands. When locating pipes and cables the locator sensing antennas should be as close as possible to the target line so it is not practical to locate lines buried under a river or seabed from the surface. In most cases, it is necessary to measure the depth of cover to ensure the line is protected from dragging anchors or other underwater hazards.

The submersible, double depth antenna is suitable for use under water for tracing pipes or cables. There is a weight at the bottom of the antenna for stability and the unit has been pressure tested to IP68 to a depth of 100m (300ft).

The antenna is supplied with 10m of submersible marine umbilical cable as standard, but lengths of up to 100m can be supplied. The extra length enables the antenna to be carried by a diver on a riverbed or seabed while the locator is used in a surface vessel. It is crucial to have effective communication between the operator with the locator and the diver with the antenna.

Alternatively, the antenna can be fastened to the end of a non-metallic boom from a barge and lowered to the riverbed or seabed.

How to use a submersible antenna

Apply the transmitter signal to the target line at an access point on the shore. The submersible antenna line for tracing the line underwater is plugged into the accessory socket of the locator. The locator is used onboard a boat, which should by positioned directly over the line. The transmitting signal should be applied by Direct Connection with the strongest possible signal and at the frequency that the submersible antenna is calibrated to. Make a ground connection about 50m (160ft) from the transmitter. Test the quality of signal on the line before locating on the water.

NOTE: The submersible antenna is calibrated to work at one frequency.

Tips for using a submersible antenna:

The user in the boat should be a specialist or have considerable experience using a locator so that they can give concise instructions to the diver.

It is prudent for the pair to practice working together on dry land before attempting to locate underwater. Using the antenna the diver should locate and trace a known line blindfolded receiving directions from the user with the locator out of sight of the line and the diver.

Because of rapid signal loss and a combination of large surface area and very conductive soil there may be problems applying a suitable signal for tracing a large diameter pipe. It may be necessary to use a high power, low frequency tracing signal.

© 2023 Radiodetection Ltd

It is necessary to define a method of recording target line position and depth before starting work in the boat or on the seabed.

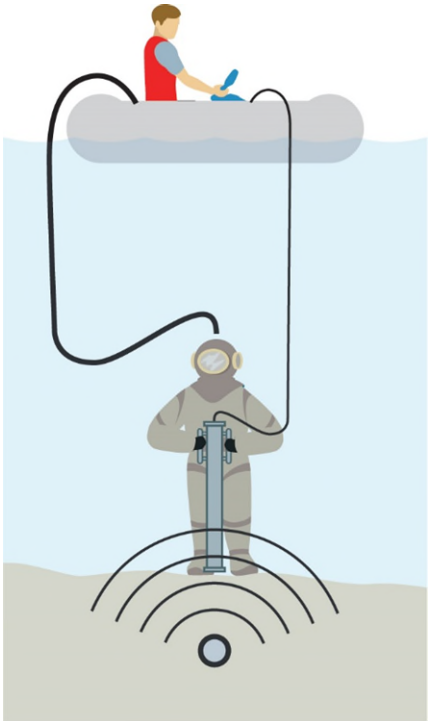

Figure 9.11: Using a submersible antenna

⚠ WARNING! Only properly licensed and experienced divers should attempt to use the submersible antenna

Section 10 - Appendices

10.1 Care and maintenance

The RD7200 locator and transmitter are robust, durable and weatherproof. However, you can extend your equipment's life by following these care and maintenance guidelines.

General

Store the equipment in a clean and dry environment.

Ensure all terminals and connection sockets are clean, free of debris and corrosion and are undamaged.

Do not use this equipment when damaged or faulty.

Batteries and power supply

Use only good quality Alkaline or NiMH batteries.

When using an AC adapter, use only Radiodetection approved adapters.

Only use Radiodetection approved Li-Ion battery packs.

Cleaning

⚠ WARNING! Do not attempt to clean this equipment when it is powered or connected to any power source, including batteries, adapters and live cables.

Ensure the equipment is clean and dry whenever possible.

Clean with a soft, moistened cloth.

If using this equipment in foul water systems or other areas where biological hazards may be present, use an appropriate disinfectant.

Do not use abrasive materials or chemicals as they may damage the casing, including the reflective labels.

Do not use high pressure hoses.

Disassembly

Do not attempt to disassemble this equipment under any circumstances. The locator and transmitter contain no user serviceable parts.

Disassembly may damage the equipment and or reduce its performance and may void the manufacturer's warranty.

Service and maintenance

For over 40 years, Radiodetection has designed and manufactured Cable and pipe locators. Our reputation for quality and reliability is unrivalled in the industry. When used and maintained correctly, customers enjoy many years of uninterrupted use. We recognise that product selection is just the start of the journey. Quality of service and aftercare are paramount to ensure the life of the equipment. With that in mind, Radiodetection offers a range of comprehensive after-sales services to give users the confidence that your cable and pipe locators will live to their full potential.

To keep our products in good working order, we would encourage users to evaluate their own needs and operational user cases to create a maintenance, service and repair regimen that is right for them. Many factors can influence the creation of that regimen. Here are just some factors that should be considered that might have a bearing on what is the right maintenance regimen for you. Frequency of use, type of service, environmental conditions and creating a common maintenance program across other equipment types will all come into play. We would encourage users to ensure they factor in the full extent of the locator kit. Transmitter, receivers, chargers, leads and Li-Ion batteries as examples all need to be factored both separately and collectively.

Users may want to consider a multi-factored regimen that covers daily, weekly, monthly and annual activities. This could start with visual inspections especially power cables, gaskets and batteries for signs of wear and tear. Radiodetection also offers two services that customers may want to consider.

Remote digital calibration

eCert remote calibration testing provides fast and convenient calibration testing of Radiodetection's locators without the need to return them to a service centre, saving time and expense for operators.

Using an internet connection to Radiodetection, eCert tests the locating circuitry within a connected locator, applying test signals to key components to confirm that the unit remains within calibration and suitable for use.

Service and repair services

Radiodetection also offers a global network of registered service centres that provide a range of service options to inspect, repair, service and recalibrate you pipe and cable locators.

Regularly check your locator for correct operation using eCert (see section 10.6) and the on-board Self-Test.

NOTE: Service by non-approved service centers or operators may void the manufacturer's warranty.

Radiodetection products, including this guide, are under continuous development and are subject to change without notice. Go to www.radiodetection.com or contact your local Radiodetection representative for the latest information regarding the RD7200 locator or any Radiodetection product.

10.2 Enhanced Self-Test

RD7200 locators incorporate an Enhanced Self-Test feature. In addition to the typical checks for display and power functions, the RD7200 applies test signals to it's locating circuitry during a Self-Test to check accuracy and performance.

We recommend that a self-test is run at least weekly, or before each use.

Running a Self-Test

As the Self-Test tests the integrity of the locate circuity, it is important that it is carried out away from large metallic object such as vehicles, or strong electrical signals. To run a Self-Test:

1 Press the key to enter the menu

2 Scroll to the **INFO** menu using the or keys

3 Press the key to enter the INFO menu

4 Select TEST using the or keys.

5 Press the key to select **YES**

6 Press the key to begin the Self Test

7 Once the Self-Test is completed, the result (PASS or FAIL) will be displayed.

8. Restart the locator using the key

10.3 RD Manager Online

RD Manager Online is the RD7200 Locator PC companion and allows you to manage and customize your locator. It also allows software upgrades to both the locator and transmitter.

You can use RD Manager Online to register your products to extend the warranty to a total of 3 years (see Section 10.4), setup your locator by performing a number of maintenance tasks, such as setting date and time, activating and de-activating active frequencies, setting up custom frequencies, or setting-up functions like Strike*Alert*.

RD Manager Online is compatible PCs running with Microsoft Windows 10 64 bit.

For more information about RD Manager Online refer to the RD Manager Online operation manual.

To Obtain RD Manager Online:

1 Go to http://www.radiodetection.com/RDManager_online

2 Follow the instructions

10.4 Warranty and extended warranty

RD7200 locators and transmitters are covered by a 1-year warranty as standard.

Customers can extend the warranty period to a total of 3 years by registering their products (locators and transmitters) within 3 months from purchase.

To register your product:

Visit https://portal.radiodetection.com to create your portal account* and use the Product page to register your locator or transmitter.

Visit https://support.radiodetection.com for instructions on how to create a portal account or register your product.

* A valid email address and mobile number are required.

From time to time Radiodetection may release new software to improve the performance or add new functionalities to his products. By registering user will benefit from subscribing to e-mail alerts advising about any new software and special offers related to its product range.

Users will be able to opt out at any moment from receiving software and technical notifications or just from receiving marketing material.

10.5 Upgrading software

From time to time, Radiodetection may release software upgrades to enhance features and improve performance of the RD7200 locator or transmitter.

Software upgrades are free of charge.

You can check if your products are up-to-date or upgrade them by using the RD Manager Online software upgrade screen. Refer to the RD Manager Online operation manual for further information.

E-mail alerts and notification of new software releases are sent to all registered users.

NOTE: To upgrade your software you need to have created an account using RD Manager Online and have a live internet connection. An optional Radiodetection supplied power source may be required to update your transmitter software.

10.6 eCert

The RD7200 locator should be regularly checked to ensure its correct operation.

eCert provides a thorough test of the RD7200's locating circuitry, and supplies a Radiodetection Calibration Certificate when a positive test result is obtained.

To run eCert, the locator should be connected to an internet-enabled PC, on which the RD Manager Online software is installed. Additional eCert credits may be required and purchased.

Refer to the RD Manager Online operation manual for further details.

NOTE: eCert is not presently available for transmitters.

10.7 TX5 and TX10 locator models, operation mode and active frequencies

Active Frequencies	Operation Mode	PDL	PDLU	PXL	TL	PL	DL	SL	SLQ	H2O+	RD4K	72	82
512Hz	DC CD Clamp	•	•	•	•	•	•		•			•	•
570Hz	DC CD Clamp	•											•
577Hz	DC CD Clamp	•		•									•
640Hz	DC CD Clamp	•		•	•	•	•					•	•
760Hz	DC CD Clamp	•											•
870Hz	DC CD Clamp	•		•									•
920Hz	DC CD Clamp	•											•
940Hz	DC Induction CD Clamp	•	•	•									•
4kHz (4096Hz)	DC Induction Clamp CD Clamp LPC/LCC	•	•	•							•		•
8kHz (8192Hz)	DC Induction Clamp LPC/LCC	•	•	•	•	•	•	•	•	•	•	•	•
9.8kHz (9820Hz)	DC Induction Clamp CD Clamp LPC/LCC	•								•			•
33kHz (32,768Hz)	DC Induction Clamp LPC/LCC	•	•	•	•	•	•	•	•	•	•	•	•
65kHz (65,536Hz)	DC Induction Clamp CD Clamp LPC/LCC	•		•	•	•	•	•	•	•	•	•	•
83kHz (83,000Hz)	DC Induction Clamp CD Clamp LPC/LCC										•		•
83kHz (83,077Hz)	DC Induction Clamp CD Clamp LPC/LCC	•		•				•	•	•		•	•
131kHz (131,072Hz)	DC Induction Clamp CD Clamp LPC/LCC	•		•	•	•	•	•	•	•		•	•
200kHz	DC Induction Clamp CD Clamp LPC/LCC	•		•	•					•		•	•

(*) DC = Direct Connection, LPC = Live Plug Connector, LCC= Live Plug Connector

10.8 TX5 Fault Find locator models

CD pairs	PDL	TL	PL	72	82
8KFF	•	•	•	•	•

10.9 TX 10 Fault Find locator models

CD pairs	PDL	PDLU	TL	PL	H2O+	72	82
8KFF	•		•	•		•	•

10.10 List of supported accessories

Locator Accessories		
High Gain Stethoscope		10/RX-STETHOSCOPE-HG
Small Stethoscope		10/RX-STETHOSCOPE-S
Large Stethoscope		10/RX-STETHOSCOPE-L
640Hz Submersible DD Antenna (10m Cable)		10/RX-SUBANTENNA-640
8kHz Submersible DD Antenna (10m Cable)		10/RX-SUBANTENNA-8K
512Hz Submersible DD Antenna (10m Cable)		10/RX-SUBANTENNA-512
Additional Submersible Cable Length (x meter)		10/RX-SUBANTENNA-CABLE
Submersible Antenna Adaptor		10/RX-SUBANTENNA-ADAPTOR
Headphones		10/RX-HEADPHONES
A-Frame (includes A-Frame Lead)	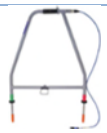	10/RX-AFRAME
A-Frame Bag		10/RX-AFRAME-BAG
A-Frame Lead		10/RX-AFRAME-LEAD

2" (50mm) Locator Clamp		10/RX-CLAMP-2 Or 10/RX-CLAMP-50
4" (100mm) Locator Clamp		10/RX-CLAMP-4 or 10/RX-CLAMP-100
5" (130mm) Locator Clamp		10/RX-CLAMP-5 or 10/RX-CLAMP-130
Locator CD/CM Clamp (only used for Current Measurement)		10/RX-CD-CLAMP

Transmitter Accessories		
Live Plug Connector		10/TX-LPC-XX (*XX= EU, UK, US)*
Live Cable Connector (with Crocodile clips)		10/TX-LCC
2" (50mm) Transmitter Clamp		10/TX-CLAMP-2 or 10/TX-CLAMP-50
4" (100mm) Transmitter Clamp		10/TX-CLAMP-4 or 10/TX-CLAMP-100
5" (130mm) Transmitter Clamp		10/TX-CLAMP-5 or 10/TX-CLAMP-130
8.5” (215mm) Transmitter Clamp		10/TX-CLAMP-8.5 or 10/TX-CLAMP-215
Signal Clamp Extension Rod		10/TX-CLAMP-EXTROD
Transmitter Connection Kit Contains Earth Reel, Earth Stake, Direct Connection Lead and Magnet		10/TX-CONNECTION-KIT
Transmitter Connection Kit Contains Earth Reel, Earth Stake, Direct Connection Lead with banana connectors and Magnet		10/TX-CONNECTION-KIT-BAN

Earth Lead 10m and Magnet		10/TX-EARTHLEAD-KIT
Earth Lead 10m		10/TX-EARTHLEAD
Hi-strength Magnet with M4 eyebolt		10/TX-MAGNET
Spiral Earth Stake		10/TX-EARTHSTAKE
Tx Direct Connection Lead		10/TX-DC-LEAD
Tx Direct Connection Lead, crocodile clip		10/TX-DC-LEAD-TEL
Tx Direct Connection Lead with banana connectors, insulated plug/socket		10/TX-DC-LEAD-BAN
Tx Direct Connection Lead with banana connectors, Open Grid Europe		10/TX-DC-LEAD-OPEN
Tx-10 Isolation Transformer (for locating 3-phase core-core shorts)		10/TX121-XX *(XX= DE, EN, FR, NL)*

Accessories for tracing or locating non-conductive utilities

Standard Sonde 33kHz, depth up to 5m		10/SONDE-STD-33
Standard Sonde 8kHz, depth up to 5m		10/SONDE-STD-8
Standard Sonde 512Hz, depth up to 5m, single end		10/SONDE-STD-512
Standard Sonde 512Hz, depth up to 5m, twin end		10/SONDE-STD-512-TW
Sewer Sonde 33kHz, depth up to 8m		10/SONDE-SEWER-33

Super Sonde 33kHz, depth up to 15m		10/SONDE-SUPER-33
4.5" (115mm) Diameter Floats/Pair for Sewer and Super Sondes		10/SONDE-FLOATS
S6 Microsonde Kit, incl. battery and case		10/SONDE-MICRO-33
Pack of 10 × Batteries for S6 Microsonde		10/SONDE-MICRO-BATPACK
S9 MiniSonde, incl. battery and case		10/SONDE-MINI-33
Pack of 10 × Batteries for S9 MiniSonde		10/SONDE-MINI-BATPACK
S13 Sonde Kit (includes M10 Stud and Plain End Caps, two Batteries and Case)		10/SONDE-S13-33
Pack of ten spare Batteries for S13 Sonde		10/SONDE-S13-BATPACK
S18A Sonde 33kHz with M10 Stud End Cap and one D1/3N battery		10/SONDE-S18A-33
S18A Sonde 33kHz Kit with M10 Stud and Plain End Caps and two D1/3N Batteries		10/S18-33-KIT
S18A M10 Stud End Cap with one D1/3N Battery		10/S18-M10-ENDCAP
S18A Extended Plain Cap with one D1/3N Battery		10/S18-PLAINENDCAP
S18A Pack of 5 D1/3N Batteries		10/S18-BATTERYPACK
S18B Sonde 33kHz with Extended Aluminum End Cap for two AA Batteries (batteries included)		10/SONDE-S18B-33
S18B Sonde Aluminum AA Batteries End Cap (batteries included)		10/S18-AA-ENDCAP

Bendi Sonde with M10 Male End Cap (512Hz continuous)		10/SONDE-BENDI-512
Pack of 5 AA Batteries		10/SONDE-BENDI-BATPACK
FlexiTrace 50m (Tx powered pushrod transmitter)		10/TRACE50-XX (*XX = D, F, GB, NL)*
FlexiTrace 80m (Tx powered pushrod transmitter)		10/TRACE80-XX (*XX = D, F, GB, NL)*
4.5mm 50m Flexrod		10/FLEXRODF50-4.5
4.5mm 80m Flexrod		10/FLEXRODF80-4.5
6.7mm 50m Flexrod		10/FLEXRODF50-7
6.7mm 100m Flexrod		10/FLEXRODF100-7
6.7mm 150m Flexrod		10/FLEXRODF150-7
9mm 60m Flexrod		10/FLEXRODF60-9
9mm 120m Flexrod		10/FLEXRODF120-9
M6 to M10 adapter to interface 6.7mm rod with RD M10 thread		10/6-10FLEXRODADAPTOR
Spring Coupling M10 Male		10/SU0335
Wards Rod Connector, 3/4" (19mm) x 10 BSW, Female:		02/SU0341
Wards Rod Connector, 1/2" (13mm) x 12 BSW, Female		02/SU0342
"Lockfast" Connector, 3/4" (19mm) x 10 BSW		02/SU0676

Locator power accessories and spares		
Li-Ion rechargeable battery pack with mains charger (includes power lead) (1)		10/RX-MBATPACK-V2-XX
Li-Ion rechargeable battery pack with auto charger (1)		10/RX-ABATPACK-V2
Li-Ion rechargeable battery pack with mains and automotive charger (includes power lead) (1)		10/RX-MABATPACK-V2-XX
2 cells battery tray (2x D Cell / LR20) (2)		10/RX-2DCELL-TRAY

(1) Compatible with RD7200/RD8200, RD8100/RD8100 and Marker (MRX) Locators

(2) Compatible with RD7200/RD8200, RD7100/RD8100 and RD7000+/RD8000 Locators

Replace XX with AU, EU, UK or US

Transmitter power accessories and spares		
Mains PSU (includes power lead)		10/TX-MPSU-XX
12V Car Power Lead with Isolation Transformer		10/TX-APSU
Li-Ion rechargeable battery pack with mains charger (includes power lead) (1)		10/TX-MBATPACK-LION-K-XX
Li-Ion rechargeable battery pack with automotive charger (1)		10/TX-ABATPACK-LION-K
Li-Ion rechargeable battery pack with mains and automotive charger (includes power lead) (1)		10/TX-MABATPACK-LION-K-XX
Li-Ion automotive charger (1)		10/TX-ACHARGER-LION
Li-Ion mains charger (includes power lead) (1)		10/TX-MCHARGER-LION-XX

Li-Ion rechargeable battery pack (no charger) (1)		10/TX-BATPACK-LION
8 cells battery tray (8x D Cell / LR20)		10/TX-8DCELL-TRAY

(1) Li-Ion rechargeable packs cannot be charged in the transmitter

Replace XX with AU, EU, UK or US

Mains Leads

C7 Mains lead, 6.5' (2m), 2.5A		10/MAINS-LEAD-C7-XX
C13 Mains lead, 6.5' (2m), 2.5A		10/MAINS-LEAD-C13-XX

Replace XX with AU, EU, UK or US

Transport and Storage Accessories

Locator backpack and bag for Tx transmitter (without tool tray) - set of soft carry bags		10/LOCATOR-BACKPACK-SET
Locator backpack		10/LOCATOR-BACKPACK
Tx transmitter (without tool tray) soft carry bag		10/TX-BAG
Locator and Tx transmitter soft carry bag		10/LOCATORBAG
Locator and Tx transmitter hard case		10/RD7K8KCASE-USA
Locator and Tx transmitter hard flight case with wheels		10/RD7K8KCASE

Calibration Certificates, Remote Calibration and PC Software	
Locator Calibration Certificate, per unit (requestable with initial locator order, cannot be ordered later)	10/CALCERT
RD Manager Online Check product documentation for details	www.radiodetection.com/rdmanager_online

RADIODETECTION®

SPX TECHNOLOGIES

Our Mission

Provide best in class equipment and solutions, to prevent damage to critical infrastructure, manage assets and protect lives.

Our Vision

To be the world's leader in the management of critical infrastructure and utilities.

Our locations

USA

Raymond, ME
Kearneysville, WV

Canada

Vaughan, ON
Mississauga, ON

Europe

United Kingdom **HQ**
France
Germany
The Netherlands

Asia Pacific

India
China
Hong Kong
Indonesia
Australia

Visit: **www.radiodetection.com** Follow us on:

Scan to see a full list of our office locations

Copyright © 2023 Radiodetection Ltd. All rights reserved. RD7200, Power Filters,Peak+, eCert, Strike*Alert*, SideStep*Auto*, CALSafe, RD Manager Online and Radiodetection are either trademarks of Radiodetection in the United States and/ or other countries. Microsoft and Windows are either registered trademarks or trademarks of Microsoft Corporation in the United States and/or other countries. Due to a policy of continued development, we reserve the right to alter or amend any published specification without notice. Photos are indicative and products received may not be identical to those shown. This document may not be copied, reproduced, transmitted, modified or used, in whole or in part, without the prior written consent of Radiodetection Ltd.

90/RD7200-OM-ENG/07

Cable Locators & Survey