RADIODETECTION®

SPX TECHNOLOGIES

RD8200™

Precision Multifunction Cable & Pipe Locator

Operation manual

90/RD8200-OM-ENG/07

Table of Contents

Section 1 - Preface 1

1.1 Important notices 1
1.2 Compliance.....2
1.3 Intellectual property.....3

Section 2 - Introduction 4

2.1 About this manual 4
2.2 About the RD8200 4
2.3 Extended warranty.....4
2.4 Manual outline 4
2.5 Safety 4
2.6 Training.....5

Section 3 - System overview 6

3.1 RD8200 locator.....7
3.2 Tx-5 and Tx-10 transmitters.....9
3.3 Using the menu.....9

Section 4 - Operation 11

4.1 First use.....11
4.2 Power on / off.....14
4.3 Keypad actions & shortcuts.....14
4.4 Antenna modes.....15
4.5 System setup.....15
4.6 Dynamic Overload Protection™ 16
4.7 Overload warning.....16
4.8 TruDepth™ measurement.....17
4.9 Passive Avoidance.....17
4.10 Strike*Alert*™ 17
4.11 Swing Warning.....17
4.12 Vibration (haptic) Warnings.....17
4.13 Backlight.....17
4.14 Bluetooth wireless.....17
4.15 iLOC™ and SideStep™ 18
4.16 SideStep*auto*™ 18
4.17 Transmitter power output 18
4.18 Transmitter Eco mode.....18
4.19 Maximum Voltage 19
4.20 Measure mode.....19
4.21 CALSafe™.....19
4.22 Usage-Logging 20
4.23 UTIL mode.....20
4.24 GPS (GNSS) 20

Section 5 - Locating cables and pipes.....22

5.1 Frequencies.....22
5.2 Choice of frequency for active location 23
5.3 Antenna modes.....24
5.4 Compass 25
5.5 Trace 25
5.6 Pinpoint 25
5.7 Sweep and search.....26
5.8 Nulling Out 27

Section 6 - Depth and current readings....29

6.1 TruDepth™ 29
6.2 Verifying depth measurements 29
6.3 Current readings.....30

Section 7 - Locating techniques.....32

7.1 Identifying target utilities 32
7.2 Signal & ground connection 32
7.3 Double-ended connections 33

Section 8 - Fault-finding.....34

8.1 About fault-finding.....34
8.2 Preparation.....34
8.3 How to find a fault.....35

Section 9 - Current Direction (CD) 36

9.1 Understanding CD 36
9.2 CD reset 37
9.3 CD clamps & stethoscopes.....37

Section 10 - Survey measurements 38

10.1 Saving measurements 38
10.2 Pairing to Android 38
10.3 Survey measurement transmission over Bluetooth 38
10.4 Erasing measurements.....39
10.5 Retrieving all survey measurements via Bluetooth 39
10.6 Troubleshooting.....39

Section 11 - iLOC™ 40

11.1 Switching Bluetooth On.....40
11.2 Switching Bluetooth off 40
11.3 Pairing to an iLOC transmitter.....40

© 2023 Radiodetection Ltd

11.4 Troubleshooting 41
11.5 Using iLOC 41
11.6 iLOC functions 41
11.7 SideStep™ 42
Section 12 - Using accessories..... 43
12.1 About accessories.....43
12.2 Headphones 43
12.3 Locator clamps 43
12.4 Transmitter clamps 44
12.5 Transmitter external power supply 45
12.6 Sondes 45
12.7 Stethoscopes 47
12.8 Submersible antenna 48
12.9 Phone/Tablet mount.....48
Section 13 - Appendices..... 50
13.1 Care and maintenance.....50
13.2 Enhanced Self-Test 51
13.3 RD Manager™ Online.....51
13.4 Warranty and extended warranty 51
13.5 Upgrading software.....51
13.6 eCert.....52
13.7 Time and date error messages 52
13.8 TX5 and TX10 locator models, operation mode and active frequencies.....53
13.9 TX5 Fault Find locator models 54
13.10 TX 10 Fault Find locator models 54
13.11 TX 10 locator models Current Direction (CD) frequencies.....54
13.12 TX10-B iLOC locator model, operation mode and active frequencies.....55
13.13 TX 10-B iLOC Fault Find locator models 56
13.14 TX 10-B iLOC locator models Current Direction (CD) frequencies.....57
13.15 List of supported accessories.....57

Section 1 - Preface

Before you begin

Thank you for your interest in Radiodetection's RD8200® cable and pipe locator.

The RD8200 delivers the latest in locating technology in a powerful yet ergonomic and light-weight design.

Please read this user manual in its entirety before attempting to use the RD8200 system.

Radiodetection products, including this manual, are under continuous development. The information contained within is accurate at time of publication; however the RD8200, this manual and all its contents are subject to change.

Radiodetection Limited reserves the right to modify the product without notice and some product changes may have taken place after this user manual was published.

Contact your local Radiodetection dealer or visit www.radiodetection.com for the latest information about the RD8200 product family, including this manual.

1.1 Important notices

General

The performance of any cable and pipe locator may be affected when used in close proximity to ferrous materials such as manhole covers, steel-toe boots, mobile phones and nearby vehicles. Keep a distance of one or two meters from these objects when taking critical measurements such as depth and current readings.

This instrument, or family of instruments, will not be permanently damaged by reasonable electrostatic discharge and has been tested in accordance with IEC 61000-4-2. However, in extreme cases temporary malfunction may occur. If this happens, switch off, wait and switch on again. If the instrument still malfunctions, disconnect the batteries for a few seconds.

Safety

⚠ WARNING! Failure to comply with safety warnings can cause serious injury or death

CAUTION!: Failure to comply with safety cautions can result in damage to equipment or property

This equipment shall be used only by qualified and trained personnel, and only after fully reading this Operation Manual.

⚠ WARNING! Direct connection to live conductors is POTENTIALLY LETHAL. Direct connections to live conductors should be attempted by fully qualified personnel only using the relevant products that allow connections to energized lines.

⚠ WARNING! The transmitter is capable of outputting potentially lethal voltages. Take care when applying signals to any pipe or cable and be sure to notify other technicians who may be working on the line.

⚠ WARNING! Ensure the TX transmitter is switched OFF before making a connection and before disconnection of the direct connection lead to a service.

⚠ WARNING! Reduce audio level before using headphones to avoid damaging your hearing.

⚠ WARNING! This equipment is NOT approved for use in areas where hazardous gases may be present.

⚠ WARNING! Before removing the transmitter battery pack, switch off the unit and disconnect all cables.

⚠ WARNING! The mains PSU supply cable is the disconnecting method for isolating the unit from the main supply.

⚠ WARNING! The battery compartment lid is the disconnecting method for isolating the unit from the battery supply. The Li-Ion rechargeable battery pack (if fitted) has an additional connector.

⚠ WARNING! Do not position the equipment so it is difficult to disconnect the unit from each supply.

⚠ WARNING! Protection will be impaired if used in a manner not specified.

⚠ WARNING! The RD8200 locator will detect most buried conductors but there are some objects, including live objects, which do not radiate any detectable signal. The RD8200, or any other electromagnetic locator, cannot detect these objects so proceed with caution. There are also some live cables which the RD8200 will not be able to detect in Power mode. The RD8200 does not indicate whether a signal is from a single cable or from several in close proximity.

CAUTION: The battery cover, the accessory cover and the headphone cover protect the locator's sockets from debris and water ingress. If they get damaged or lost, contact Radiodetection or your local service representative for replacements.

Batteries

⚠ WARNING! Only use charging equipment provided by Radiodetection. The use of alternative chargers may cause a safety hazard and/or reduce the life of the battery.

CAUTION: Do not let your battery completely discharge as this may reduce its life or damage it permanently. If you are not using your equipment for a long period charge it at least once a month.

CAUTION: thoroughly check batteries for any signs of damage prior to first use.

⚠ WARNING! Batteries can get hot after prolonged use at full output power. Take care while replacing or handling batteries.

⚠ WARNING! Do not tamper with, or attempt to disassemble the battery packs.

CAUTION: If battery failure is suspected or if the battery shows any sign of discoloration / physical damage, contact an authorized repair center to have the units returned for investigation and repair. Local, national or IATA transport regulations may restrict the shipment of faulty batteries. Check with your courier for restrictions and best practice guidelines.

Radiodetection representative will be able to direct you to our authorized repair centers.

Disposal

This symbol on the product, accessories or literature indicates that the product and its electronic accessories (e.g. charger, headset, USB cable) must not be treated as domestic waste, but must be disposed of professionally. It is your responsibility to dispose of your waste equipment by handing it over to a designated collection point for the recycling of waste electrical and electronic equipment. The separate collection and recycling of your waste equipment at the time of disposal will help to conserve natural resources and ensure that it is recycled in a manner that protects human health and the environment. For more information about where you can drop off your waste equipment for recycling, please contact your local city office, your disposal service or product supplier.

Please dispose of this device in a manner appropriate to the relevant legal requirements at the end of its product life

Batteries should be disposed of in accordance with your company's work practice, and / or the relevant laws or guidelines in your country or municipality.

Special Bluetooth® notice

RD8200 locators and transmitters contain a Class 1 Bluetooth device that can emit radio frequency energy during the operation of certain product features. While the Bluetooth device is busy, pairing or sending iLOC™ commands from the locator to the transmitter, or sending survey measurements to a paired device, always ensure a minimum separation of 200mm (8 inches) between the Bluetooth antenna and your body. The location of the antenna is shown in Section 3, figure 3.1.

Wireless technology compliance

Use of iLOC wireless technology where applicable may be subject to national telecommunication regulations. Check with your local government authorities for further information.

1.2 Compliance

The Declaration of conformity is available to download from the RD8200 cable, pipe product section page in https://www.radiodetection.com/

For EMC and Safety compliance refer to the relevant Technical specification document, which is available to download from **the RD8200 cable, pipe product section page in: www.radiodetection.com**

FCC Compliance Statement

This equipment complies with Part 15 of the FCC Rules. Operation is subject to the following two conditions:

- The equipment may not cause harmful interference.
- The equipment must accept any interference received, including interference that may cause undesired operation.

This equipment has been tested and found to comply with the limits for a Class A digital device pursuant to Part 15 of the FCC Rules.

These limits are designed to provide reasonable protection against harmful interference when the equipment is operated in a commercial environment. This equipment generates, uses, and can radiate radio frequency energy and, if not installed and used in accordance with the manufacturer's instruction manual, may cause harmful interference with radio communications. Operation of this equipment in a residential area is likely to cause harmful interference, in which case you will be required to correct the interference at your own expense.

Modifications: Any modifications made to this equipment not approved by Radiodetection may void the authority granted to the user by the FCC to operate this equipment.

Industry Canada Compliance Statements

ICES-003 Class A Notice:

This Class A digital apparatus complies with Canadian ICES-003.

Avis NMB-003, Classe A:

Cet appareil numérique de la classe A est conforme à la norme NMB-003 du Canada

Environmental

WEEE, ROHS

Manufacturing

ISO 9001:2015

1.3 Intellectual property

© 2023 Radiodetection Ltd. All rights reserved. Radiodetection is a subsidiary of SPX Technologies. Radiodetection and RD8200 are registered trademarks of Radiodetection in the United States and/or other countries.

Trademarks and Notices. The following are trademarks of Radiodetection: eCert, iLOC, TruDepth, SideStep, SideStep*auto*, RD Manager Online, Peak+, RD Map, StrikeAlert, CALSafe, Current Direction. The design of the RD8200 locators and transmitters has been registered. The design of the 4 chevrons has been registered.

The Bluetooth word, mark and logos are registered trademarks of Bluetooth Sig, Inc. and any use of such trademarks by Radiodetection is under license. RAM is a trademark of National Products Inc.. Windows is a registered trademark of Microsoft Corporation in the United States and / or other countries. Google is a registered trademarks of Google LLC.

Due to a policy of continued development, we reserve the right to alter or amend any published specification without notice. This document may not be copied, reproduced, transmitted, modified or used, in whole or in part, without the prior written consent of Radiodetection Ltd.

Section 2 - Introduction

2.1 About this manual

This manual provides underground utilities survey professionals with comprehensive operating instructions for the RD8200 locator and transmitter system. Before operating the RD8200 system it is very important that you read this manual, noting all safety warnings and procedures.

Additional documentation

The full product specification, RD Manager Online and RD Map manuals are available to download from www.radiodetection.com.

2.2 About the RD8200

The RD8200 product family offers a comprehensive range of locators and transmitters designed to meet specific customer needs.

The RD8200 locator is ergonomically designed to provide the operator with a balanced, light-weight tool that encourages extended use in most environments.

A wide range of accessories are available to enhance the performance and to add extra functionality.

For more information about the Precision Locate Accessories Range, visit

https://www.radiodetection.com/accessories

2.3 Extended warranty

RD8200 locators and transmitters are covered by a 1 year warranty as standard.

Users can extend the warranty period to a total of 3 years by registering their products (locators and transmitters) within 3 months from purchase.

To register your product:

Visit portal.radiodetection.com to create your portal account* and use the Product page to register your locator or transmitter.

Visit support.radiodetection.com for instructions on how to create a portal account or register your product.

* A valid e-mail address and mobile number are required.

Or by using the **RD Manager Online** PC software.

To Obtain RD Manager Online:

https://www.radiodetection.com/rdmanager_online

See Section 13.3 for further details

From time to time Radiodetection may release new software to improve the performance or add new functionality to products. By registering the user will have the option of subscribing to e-mail alerts advising about any new software and special offers related to its product range.

Users can opt out any time from receiving software and technical notifications or just from receiving marketing material.

2.4 Manual outline

Section 1 includes an overview of safety procedures and notices. Review them before moving on to Section 2 and the rest of this manual.

Section 3 provides an overview of the RD8200 system with annotated diagrams of the locator and transmitter.

Section 4 introduces basic setup and operation using the RD8200 locator's menu system.

Section 5 introduces the theory and practice of cable and pipe location using the RD8200 locator and transmitter.

Section 6 introduces depth and current readings.

Section 7 provides general locating tips.

Section 8 introduces cable sheath fault-finding using the RD8200 locator and an accessory A-frame.

Section 9 introduces Current Direction™ (CD).

Section 10 introduces the survey measurement recording capabilities of the locator.

Section 11 introduces iLOC™, Radiodetection's advanced remote transmitter control technology.

Section 12 introduces the range of accessories that are compatible with the RD8200 system.

Section 13 includes several appendices with reference material and other technical information.

2.5 Safety

Read this manual in its entirety before attempting to operate the RD8200 locator or transmitter. Note all safety notices in the preface and throughout this manual.

You are responsible for determining whether the conditions are suitable for using this device. Always carry out a risk assessment of the site to be inspected.

Follow your company and national safety procedures and or requirements when operating this equipment in any environment or workplace. If you are unsure what policies or procedures apply, contact your company or site's occupational health and safety officer or your local government for more information.

Do not use this equipment if you suspect that any component or accessory is damaged or faulty.

Before inserting the earth stake into the ground, ensure there are no shallow cables or services that could be damaged by the earth stake.

Use authorized accessories only. Incompatible accessories may damage the equipment or give inaccurate readings.

If you intend to uncover a sub-surface utility by digging, you must follow your company, region and country's codes of practice for excavation.

Do not use iLOC or Bluetooth in areas where wireless communication devices are considered hazardous. Check with local authorities for more information.

Keep this equipment clean and arrange for regular services with an authorized Radiodetection service center. More information can be found in the Appendix or from your local Radiodetection representative.

It is important to regularly clean and sanitize products which may become contaminated through contact with foul water or other contaminants

Headphone use: you need to remain alert to traffic and other hazards that are normally heard outdoors. Always turn the volume down before plugging headphones into an audio source and use only the minimum level, necessary to take your measurements. Excessive exposure to loud sounds can cause hearing damage.

Do not attempt to open or dismantle any part of this equipment unless directed specifically by this manual. Doing so may render the equipment faulty and may void the manufacturer's warranty.

You are responsible for determining whether you consider the measurement results to be valid and for any conclusions that are reached or any measures that are taken as a result thereof. Radiodetection can neither guarantee the validity of any measuring results nor can we accept liability for any such results. We are on no account able to accept liability for any damage which may be caused as a consequence of the use of these results. Please see the Standard Warranty Terms enclosed with the product for further information.

2.6 Training

Radiodetection provides training services for most Radiodetection products. Our qualified instructors will train equipment operators or other personnel at your preferred location or at Radiodetection headquarters.

For more information go to www.radiodetection.com or contact your local Radiodetection representative.

Section 3 - System overview

Figure 3.1: RD8200 Locator

3.1 RD8200 locator

Locator features

1 Keypad

2 LCD with auto backlight

3 Haptic (vibration) feedback

4 Speaker

5 Battery compartment

6 Accessory connector

7 Headphone connector

8 Bluetooth module antenna

9 SWING warning system

10 Optional Lithium-Ion battery pack

11 USB connector (inside the battery compartment)

Locator keypad

12 Power key : Switches the unit on and off.
Opens the locator menu

13 Frequency key : Selects frequency.
Closes submenu

14 Up and down arrows : Adjusts the locator signal gain.
Scrolls through the menu options

15 Antenna key : toggles Peak, Peak+, Null, Broad Peak and Guidance modes.
Opens a submenu

16 Survey key : Saves Survey measurements and sends them to a paired device

17 Transmitter key : Sends iLOC commands to Bluetooth transmitters

Locator screen icons

18 Indicates the signal strength and Peak marker

19 Signal strength: Numerical indication of signal strength

20 Peak / Proportional arrows: Indicates the location of the line relative to the locator

21 Battery icon: Indicates the battery level

22 Gain and Log number: Displays the log number momentarily after a survey measurement is saved to memory

23 Volume icon: Displays the volume level

24 Current Direction arrows

25 Radio Mode: Indicates when Radio Mode is active

26 Power Mode: Indicates when Power Mode is active

27 Accessory indicator: Indicates when an accessory is connected

28 CD Mode icon: Indicates when Current Direction Mode is active

29 A-Frame icon: Indicates when the A-Frame is connected

30 Operating mode indicator

31 Bluetooth icon: Indicates status of Bluetooth connection. Flashing icon means pairing is in progress. Solid icon indicates an established connection is active

32 Antenna mode icon: Indicates antenna selection: Peak, Null, Broad Peak, Peak+ and Guidance Mode

33 Sonde icon: Indicates that the signal source is from a sonde

34 Line icon: Indicates that the signal source is from a line

35 Compass indicator: Shows the direction of the located cable relative to the locator.

36 Tx status (Tx-10B model only): Transmitter communication status– confirms successful iLOC / communication.

37 Tx standby (Tx-10B model only): Indicates that the transmitter is in Standby Mode

38 Current / depth indicator

39 GPS Status icon (8200G model only): One bar indicates that GPS is active. 3 bars indicate that the GPS has locked to the GPS satellite system

40 GPS Signal quality icon (8200G model only): Indicates the quality of the signal being received

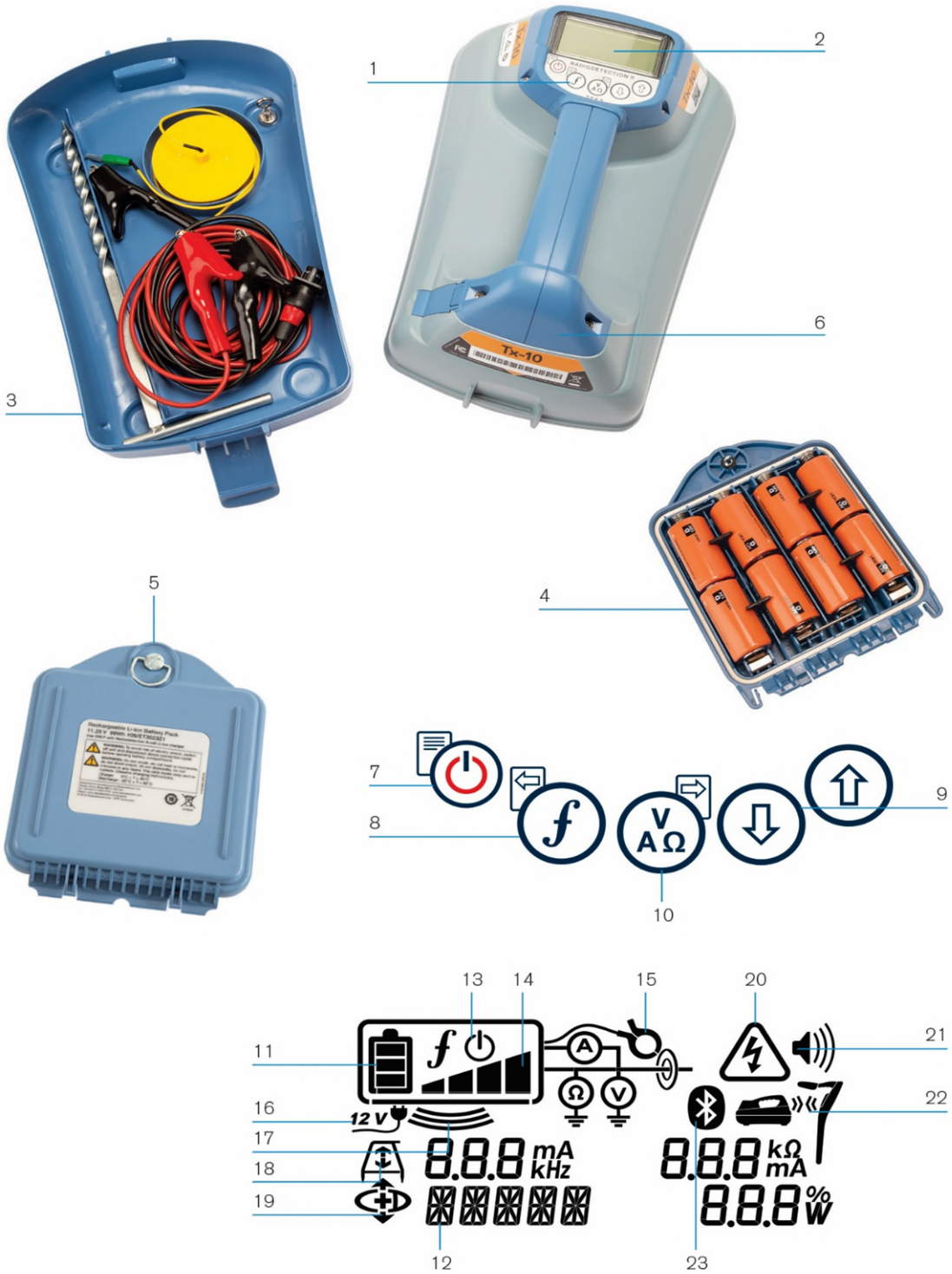

Figure 3.2 Tx Transmitter

3.2 Tx-5 and Tx-10 transmitters

Transmitter features

1 Keypad

2 LCD

3 Removable accessory tray

4 D-cells battery holder

5 Optional Lithium-Ion rechargeable battery pack

6 Bluetooth module antenna (model dependent)

Transmitter keypad

7 Power key: Switches the unit on and off.
Opens the transmitter menu

8 Frequency key: Selects frequency.
Menu navigation key

9 Up and down arrows: Adjusts the output signal level.
Scrolls through the menu options

10 Measure key: Used to take voltage and impedance measurements.
Opens a sub menu.

Transmitter screen icons

11 Battery icon: Indicates the battery level

12 Alphanumeric description of selected operation mode

13 Standby icon: Appears when the transmitter is in Standby Mode

14 Output level: Displays transmitter output power

15 Accessory or Measurement indicators: Indicates if an accessory is connected or if measure mode is active

16 DC icon: Appears when the transmitter is powered from a DC source

17 Induction indicator: Appears when the transmitter is in Induction Mode

18 A-Frame (Tx-5 or Tx-10(B) only): Indicates when the transmitter is in Fault-Find Mode

19 CD Mode indicator (Tx-10(B) only): Indicates that the transmitter is in Current Direction Mode

20 Voltage warning indicator: Indicates that the transmitter is outputting potentially hazardous voltage levels

21 Volume icon: Displays the volume level

22 Pairing icon (Tx-10B model only): Appears when the transmitter and locator are connected via iLOC

23 Bluetooth icon (Tx-10B model only): Indicates status of iLOC connection. A flashing icon means pairing is in progress

Figure 3.3 Tx-5 and Tx-10 signal transmitters

3.3 Using the menu

The RD8200 locator and transmitter menus allow you to select or change system options. Once entered, the menu is navigated using the arrow keys. Navigation is consistent on both the transmitter and the locator. In the menu the options will appear in the bottom left-hand corner of the display. Note that when browsing the locator menu, the and keys act as left and right arrows. When browsing the transmitter menu the and keys act as left and right arrows. The right arrow enters a submenu and the left arrow selects the option and returns to the previous menu.

Navigating the locator menu

1 Press the key to enter the menu

2 Use the or keys to scroll through the menu options

3 Press the key to enter the option's submenu

4 Use the or arrows to scroll through the submenu options

5 Press the key to make a selection and return to the previous menu

6 Press the key to return to the main operation screen

Locator menu options

VOL	Adjust the speaker volume from 0 (mute) to 5 (loudest)
SMLOG	Manage survey measurements and its communication over Bluetooth
ILOC	Enable, disable, reset or pair iLOC connections
GPS	Enable / disable the internal GPS module and SBAS augmentation (8200G model) or select an external GPS source
UNITS	Select metric or imperial units
UTIL	Enable or disable utility selection
ULIST	Utility Selection – Only visible if utility section is active
LANG	Select menu language
POWER	Select local power network frequency: 50 or 60Hz
ANT	Enable or disable antenna modes
FREQ	Enable or disable individual frequencies
ALERT	Enable or disable Strike*Alert*
BATT	Set battery type: Alkaline, NiMH or Li-Ion
ARROW	Select NULL or proportional Guidance (GUIDE) arrows in Peak+ mode
COMPA	Enable or disable display of the Compass feature
VALRT	Enable or disable vibrating handle warnings
AUDIO	Set audio tone frequency level high or low
SWING	Enable or disable Swing warning
INFO	Run a Self-Test, show the locator software version and revision, display the date of the most recent service recalibration (CAL) or the most recent eCert calibration (ECERT)
CDR	CD Reset (when in CD mode)

Table 3.1 Locator menu options

Navigating the transmitter menu

1 Press the key to enter the menu

2 Use the or keys to scroll through the menu options

3 Press the key to enter the option's submenu.

4 Use the or keys to scroll through the submenu options

5 Press the key to confirm selection and return to the previous level or exit the menu

6 Press the key to return to the main operation screen

Transmitter menu options

VOL	Adjust the speaker volume from 0 (mute) to 3 (loudest)
FREQ	Enable or disable individual frequencies
BOOST	Boost transmitter output for a specified period of time (in minutes)
LANG	Select menu language
OPT F	Run SideStep*auto*™ to auto-select a locate frequency for the connected utility
BATT	Set battery type: Alkaline, NiMH or Li-Ion. Select Eco mode (alkaline batteries only)
MAX P	Set the transmitter to output its maximum wattage.
MODEL	Match the transmitter setting to the model of your locator (see Appendices for a list of all available models)
MAX V	Set the output voltage to maximum (90V)
iLOC	Enable, disable or pair Bluetooth connections (TX10B model only)
INFO	Show the transmitter software version and revision

Table 3.2 Transmitter menu options

Section 4 - Operation

4.1 First use

Power options

RD8200 systems are shipped as standard configured to use Li-Ion battery packs.

Both the locator and transmitter can also be powered using good quality rechargeable D-cell NiMH batteries or the optional accessory Li-Ion rechargeable battery packs. It's important to set the correct battery chemistry in the locator to optimize performance, see Section 4.5

Transmitters can also be powered using optional accessory mains or vehicle power adapters. Refer to section 13.15 for more information.

Inserting batteries

RD8200 systems are shipped with D cell battery trays. Suitable alkaline or NiMH batteries should be fitted in the battery compartment before your first use.

On the Locator:

To fit the D-cell batteries in the locator, unlatch the battery compartment

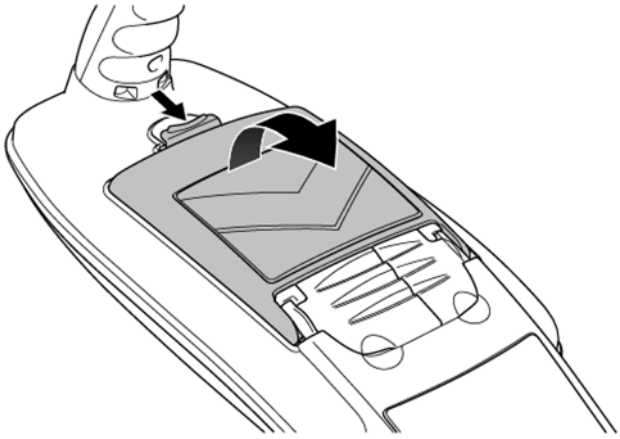

Figure 4.1 Open the battery compartment

Insert 2 × good quality D-cell batteries. Note the polarity of the cells when inserting them in the battery tray.

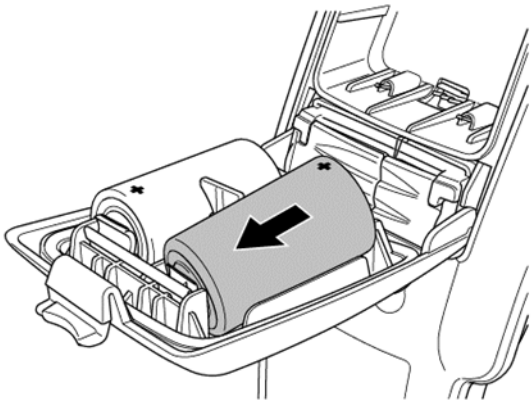

Figure 4.2 Inserting locator batteries

On the transmitter:

To fit the D-cell batteries in the transmitter, unlatch the accessory tray. The battery compartment (see figure 3.2) is located underneath the transmitter body. Use the turnkey to unlatch the battery compartment. Insert eight D-Cell Alkaline or NiMH batteries.

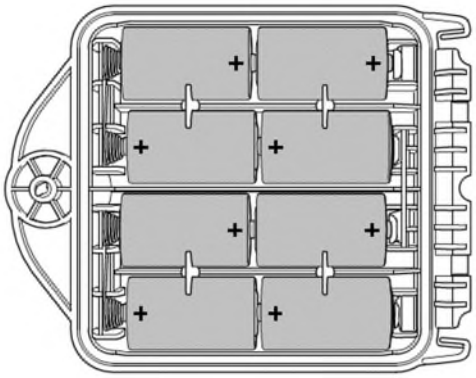

Figure 4.3 D-cell battery trays

Battery status

The locator and transmitter displays provide a battery level indicator (refer to the diagrams in Section 3). When battery replacement is necessary, the display shows a flashing battery icon.

NOTE: The locator volume may automatically lower if set to level 5 or 4, when using alkaline batteries and if their charge is low. When this happens, the display will shortly flash the 'LOW BATT' warning and show the reduced volume level.

NOTE: Prolonged use of maximum volume and vibration alerts on the locator will reduce battery life.

NOTE: Prolonged use of maximum volume and vibration alerts on the locator will reduce battery life.

NOTE: Prolonged use of high power output on the transmitter will reduce battery life.

Removing / fitting battery packs

Locator battery pack:

1 Open the battery compartment using the release catch (figure 4.1)

2 If using a Li-Ion battery pack un-plug the lead connector (see figure 4.7)

3 Lift the accessory cover slightly and press the battery retaining latch inwards

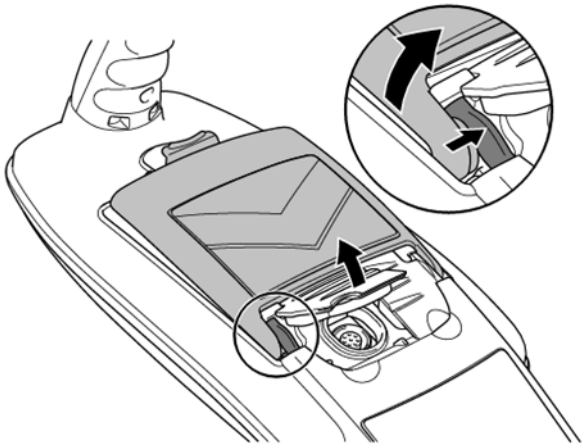

Figure 4.4 Press the retaining latch inwards

4 Rotate the battery pack away and up from the latch

5 Repeat on the other side to release the battery pack completely then lift the battery pack away

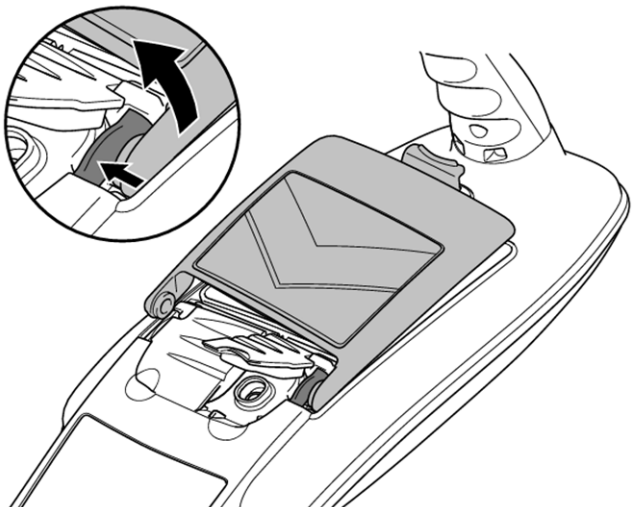

Figure 4.5 Repeat then lift the battery pack away

To fit a new battery, lift both accessory covers slightly, then gently push the replacement pack into place until it clicks on both sides, then close the battery pack

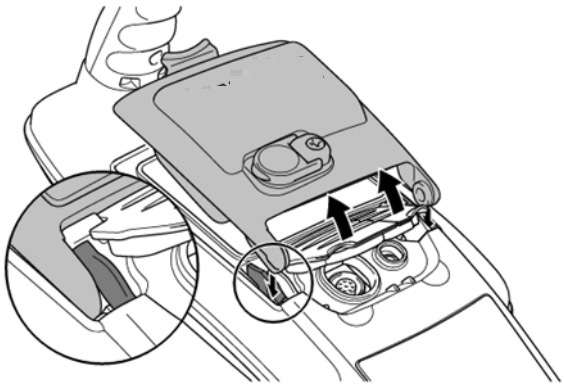

Figure 4.6 Installing a new battery pack

If using the Li-ion battery pack, plug the lead into the battery connector (fig 4.7).

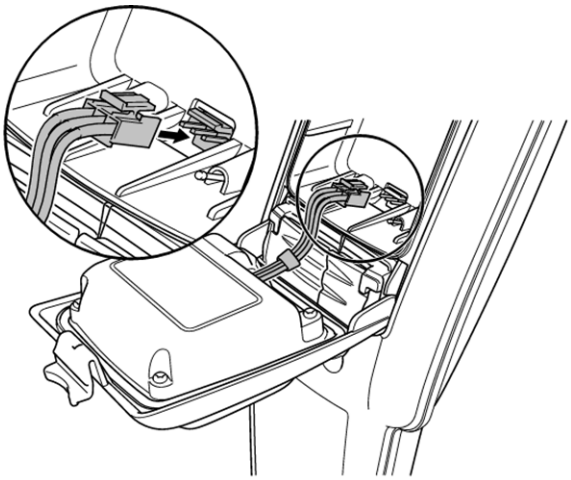

Figure 4.7 Connecting the Li Ion lead

NOTE: Fully charge your lithium-ion battery pack before its first use

Transmitter battery pack:

1 Unlatch then remove the accessory tray

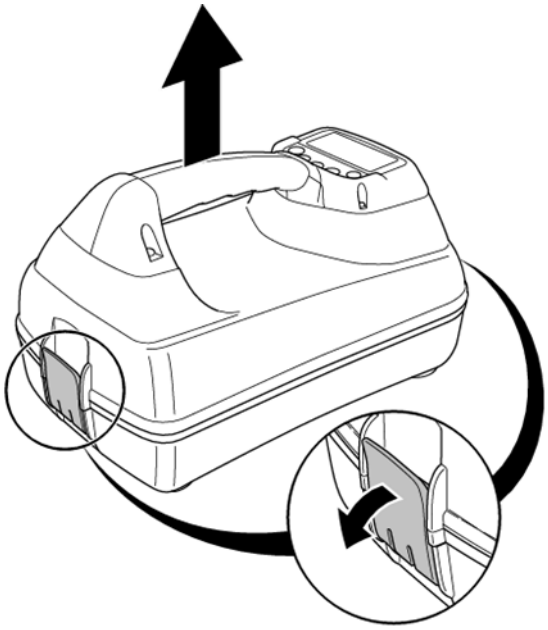

Figure 4.8 Release then remove the accessory tray

2 Turn the release catch, then open the battery compartment

3 Release the retaining catch (fig 4.10) by pressing gently, then lift the battery pack away

4 Line up the battery pack clips with the corresponding recesses on the transmitter body and press into place (fig 4.11)

5 Close the battery pack, turn the retaining latch and replace the accessory tray

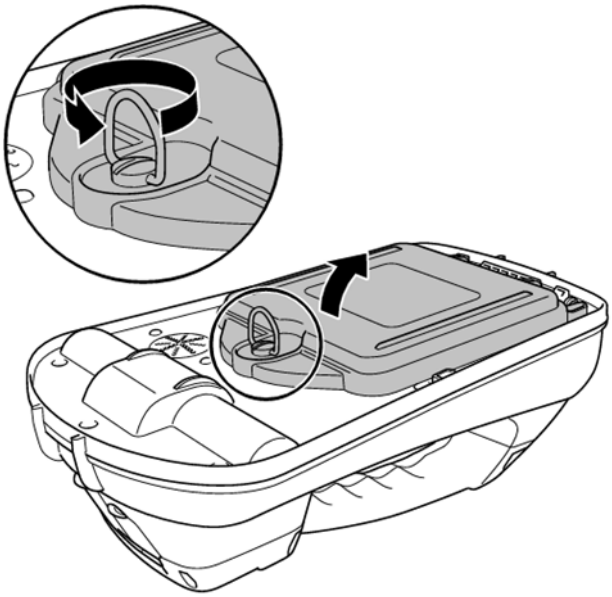

Figure 4.9: Opening the battery compartment

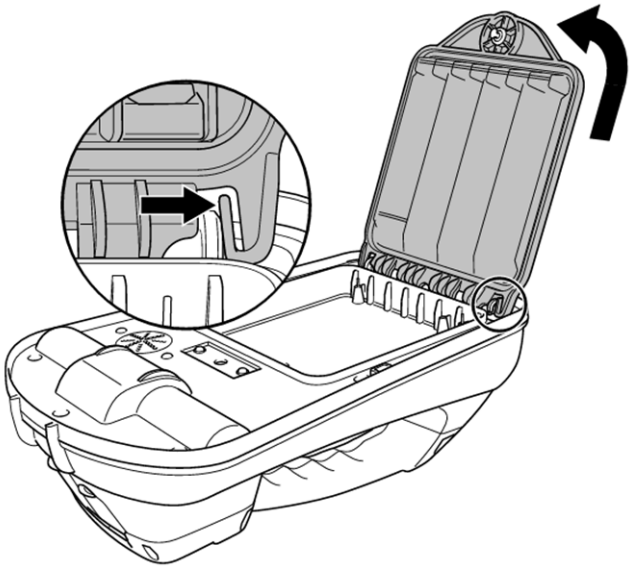

Figure 4.10: Press the release catch and lift the battery pack away

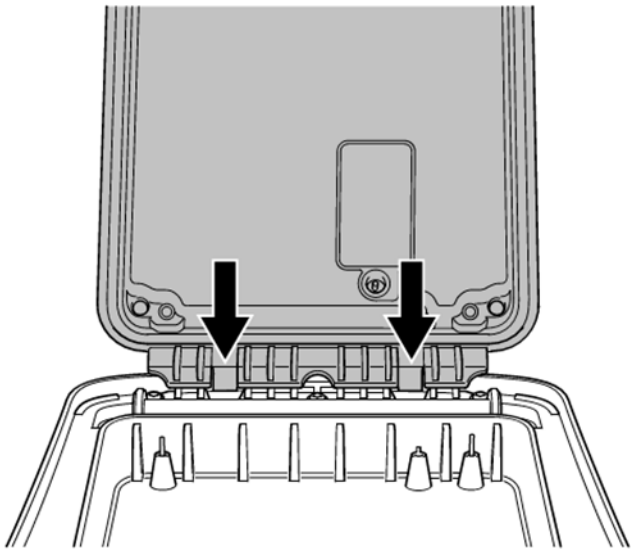

Figure 4.11: Line up the battery pack and press into position

Charging the battery packs

⚠ WARNING! Only use charging equipment provided by Radiodetection. The use of alternative chargers may cause a safety hazard and/or reduce the life of the battery.

CAUTION: Do not let your battery completely discharge as this may reduce its life or damage it permanently. If you are not using your equipment for a long period charge them at least once a month.

⚠ WARNING! Batteries can get hot after prolonged use at full output power. Take care while replacing or handling batteries.

⚠ WARNING! Do not tamper with, or attempt to disassemble the battery packs.

CAUTION: If battery failure is suspected or if the battery shows any sign of discoloration / physical damage return the entire unit to an authorized repair center for investigation and repair. Local, national or IATA transport regulations may restrict the shipment of faulty batteries. Check with your courier for restrictions and best practice guidelines. Your local Radiodetection representative will be able to direct you to our authorized repair centers.

You can re-charge your batteries using the Radiodetection mains or automotive chargers.

NOTE: The charging temperature range is 0 to 45 °C, 32 to 113°F. Do not attempt to recharge your batteries outside this temperature range.

Locator Li-Ion battery pack

To recharge the locator battery pack, connect the battery charger to the DC input connector on the front of the battery pack.

Figure 4.12 Charging the locator Li-ion battery pack

Transmitter Li-ion battery pack

To recharge the battery pack, remove the pack from the transmitter and connect the transmitter battery charger.

Figure 4.13 Charging the transmitter Li-Ion battery pack

For more information about recharging batteries refer to the instructions that came with your charger

4.2 Power on / off

Switch the locator or transmitter on by pressing the ⏻ key.

To switch the locator or transmitter off, press and hold the ⏻ key until the screen blanks off.

NOTE: The locator will automatically power off after 5 minutes if no keys are pressed.

4.3 Keypad actions & shortcuts

Locator key actions

Key	Short press	Long press
⏻	Enter the menu	Switch power off
ƒ	Scroll through locate frequencies from low to high	*In active locating:* SideStep (see 'iLOC' section) *When using Current Direction™:* Perform a CD Reset
	When using active frequencies: Toggle Peak, Peak+, Null, Broad Peak and Guidance antenna modes. *In Power Mode:* scroll through Power Filters™ for improved discrimination of parallel or strong power signals In UTIL mode: Scroll through a list of utilities: GAS, TEL, SEW, TMA, H2O, PWR, EXL, IRR, CTV.	*In Peak+ antenna mode:* Switch between Guidance and Null arrows
⇧ ⇩	Increase and decrease gain. RD8200 automatically sets gain to mid-point when pressed	Rapidly increase and decrease gain steps in 1dB increments
	Take a survey measurement and send over Bluetooth if paired	Switch between utilities whilst in UTIL mode.
Tx	Send an iLOC command to a paired transmitter	Enter the transmitter power setting menu for use over iLOC

Table 4.1: Locator key actions

Transmitter key actions

Key	Short press	Long press
	Enter the menu	Switch power off
	Scroll through locate frequencies from low to high	-
	Take voltage and impedance measurements using selected frequency	Take voltage and impedance measurements at a standardized frequency
	Adjusts the output signal	Select standby / maximum standard power

Table 4.2: Transmitter key actions

NOTE: to scroll through frequencies from high to low, hold while pressing the button (applies to both locators and transmitters).

4.4 Antenna modes

The RD8200 locator supports 5 antenna modes to suit your particular application or the local environment.

To scroll between locate modes, press the key.

PEAK: For accurate locating, the Peak bargraph provides a visual readout of the signal strength. The Peak signal is found directly over the buried utility.

PEAK+: Choose to combine the accuracy of the Peak bargraph with Null arrows, which can indicate the presence of distortion, or with proportional Guidance arrows for rapid line tracing – switch between them by pressing and holding the key.

GUIDANCE: Proportional arrows and a ballistic directional 'needle' combine with audio left/right indication for rapidly tracing the general path of a buried utility.

BROAD PEAK: Operating similarly to Peak mode, but giving a result over a wider area. Used to detect and trace very weak signals, for example very deep utilities.

NULL: Provides a quick left/right indication of the path of a utility. As Null is susceptible to interference, it is best used in areas where no other utilities are present

For more information on selecting and using the various antenna modes to assist with cable and pipe location, refer to Section 5.

4.5 System setup

The RD8200 locator and transmitter settings can be accessed via the menu. Once in the menu it is possible to change settings according to your personal preferences and operating requirements. Some examples of setting changes are shown below.

Refer to the locator and transmitter menu options (tables 3.1 and 3.2) for more information.

NOTE: These procedures refer to both the transmitter and locator unless stated otherwise.

Before changing settings, ensure the locator or transmitter is switched on by pressing the key for two seconds.

Language

The locator and transmitter support a number of languages. You can specify your preferred language using the menu system.

To select your preferred menu language:

1 Press the key to enter the menu

2 Scroll to the **LANG** menu using the or keys

3 Press the key (on the locator) or the key (on the transmitter) to enter the LANG menu

4 Scroll through the language options using the or keys

5 Press the key to accept your selection and return to the main menu.

6 Press the key to return to the main operation screen.

Battery type

RD8200 locators and transmitters support Lithium-Ion, Alkaline or Nickel Metal Hydride batteries.

You should set the Locator and transmitter battery type to match the currently installed type. This is to ensure optimal performance and correct battery level indication.

Lithium-Ion batteries will automatically be detected by the locator

To set your battery type:

1 Press the key to enter the menu

2 Scroll to the **BATT** menu using the or arrows

3 Press the key (on the locator) or the key (on the transmitter) to enter the BATT menu

4 Scroll through the battery options using the the or keys.

5 Press the key to accept your selection and return to the main menu

6 Press the key to return to the main operation screen

7 If you are using the optional Li-Ion RD8200 battery pack, the locator will automatically select the correct battery type.

Power network frequency

Select the correct frequency (50 or 60Hz) for your country or region's power supply on your locator.

To change power frequency on the locator:

1 Press the key to enter the menu

2 Scroll to the **POWER** menu using the or keys

3 Press the key to enter the POWER menu

4 Scroll through the power options using the or keys

5 Press the key to accept your selection and return to the main menu

6 Press the key to return to the main operation screen

Measurement units

The RD8200 locator allows you to work in Metric or Imperial (US customary) units.

To select your preferred units:

1 Press the key to enter the menu

2 Scroll to the UNITS option using the or keys

3 Press the key to enter the UNIT menu

4 Scroll through the measurement options using the or keys to select **METRE** (for metric) or **IMP** (for imperial) units

5 Press the key to accept your selection and return to the main menu

6 Press the key to return to the main operation screen

Enabling / disabling frequencies

The locator and transmitter support a wide range of frequencies and there may be times when some of these frequencies are not used. It is possible to quickly enable or disable frequencies using the menu system.

To enable or disable frequencies:

1 Press the key to enter the menu

2 Scroll to the **FREQ** menu using the or keys

3 Press the key (on the locator) or the key (on the transmitter) to enter the FREQ menu

4 Scroll through the frequency options using the or keys

5 Press the key (on the locator) or the key (on the transmitter) to enter the frequency

6 Scroll to OFF or ON using the or keys

7 Press the key to accept your selection and return to frequency menu.

8 If you wish to make any further changes follow steps 4 to 6. If you do not wish to make any further changes press the key twice to return to the main operation screen.

Volume control

The transmitter and locator feature an internal speaker to provide critical warnings and assist with cable and pipe location.

To adjust audio level:

⚠ WARNING! Muting audio on the locator will disable the StrikeAlert audio alarm.

1 Press the key to enter the menu

2 Scroll to the **VOL** menu the or arrows

3 Press the key (locator) or the key (transmitter) to enter the **VOL** menu

4 Scroll through the volume options using the or keys

5 Press the key to accept your selection and return to the main menu.

6 Press the key to return to the main operation screen.

NOTE: The locator volume may automatically lower if set to level 5 or 4, when using alkaline batteries and if their charge is low. When this happens, the display will shortly flash the 'LOW BATT' warning and show the reduced volume level.

4.6 Dynamic Overload Protection™

Dynamic Overload Protection™ (DOP) allows you to locate accurately in areas with high levels of electromagnetic interference, such as sub-stations and beneath high-voltage transmission lines. DOP works by disregarding signal spikes that would otherwise overwhelm the RD8200 locator's digital signal processor. DOP is an integrated feature of all RD8200 locators. No action is required by the user.

4.7 Overload warning

In cases of high levels of electromagnetic interference, the DOP will not be able to prevent the RD8200 from becoming overloaded. If the RD8200 becomes overloaded, users will be alerted by a flashing mode icon. Both the depth and

current measurements will be disabled in the event of an overload.

4.8 TruDepth™ measurement

All RD8200 locators use TruDepth™ to measure depth automatically when a good quality reading can be assured.

NOTE: TruDepth only indicates a locate depth when

- The locator is correctly oriented above the target line, cable or sonde.
- The local signal conditions are assessed as be good enough to ensure an accurate reading

To help you orientate the locator correctly, you can use the locator's compass feature on the screen

Depth readings are displayed according to your preferred units of measurement.

For more information on measuring depth, refer to Section 6.

4.9 Passive Avoidance

Passive Avoidance mode allows you to survey an area quickly by detecting power and radio signals simultaneously.

To select Passive Avoidance mode

1 Press the ⓕ key repeatedly until you find the **PASSIV** mode

Passive avoidance mode is now selected. Perform your survey as required.

NOTE: In Passive mode depth and current readings will not be displayed.

4.10 Strike*Alert*™

Strike*Alert* detects the possible presence of shallow utilities, and warns the operator with a series of flashing asterisks on the display and an audible alarm, characterized by a rapid warbling sound.

Strike*Alert* will activate in Power, Passive and Active locate modes.

RD8200 locators are shipped with Strike*Alert* enabled by default; this can be disabled by accessing the Strike*Alert* ('ALERT') menu and setting StrikeAlert to OFF.

Strike*Alert* can also be disabled using the RD Manager Online PC software. Refer to the RD Manager Online operation manual for further information.

⚠ WARNING! Muting audio on the locator will disable Strike*Alert* Audio alarm.

4.11 Swing Warning

The RD8200 locator is equipped with a Swing Warning system.

In order to operate the RD8200(G) locator properly, this must not be swinged or tilted more than a few degrees from the vertical. Swinging or tilting the locator will affect the locate and depth/current accuracy.

The Swing Warning system will alert operators of excessive swinging, to remind them to use the device correctly

RD8200 locators are shipped with Swing Warning enabled by default; this can be disabled by accessing the Swing Warning ('SWING) menu and setting it to OFF.

⚠ WARNING! Muting audio on the locator will disable Swing Warning Audio alarm.

4.12 Vibration (haptic) Warnings

The RD8200 locators are equipped with a vibration system in the handle, providing haptic feedback to the user when an alarm is active.

The handle will vibrate to warn the user of shallow cables/pipes, overload condition and swing warning.

This is a safety feature that can be useful in noisy environments.

RD8200 locators are shipped with Vibration Feedback enabled by default; this can be disabled by accessing the Vibration Alert ('VALRT') menu and setting it to OFF.

NOTE: The Vibration alert may cause the volume to reduce automatically from level 5 or 4 when using alkaline batteries and if their charge is low.

4.13 Backlight

The transmitter and locator feature a backlight to improve LCD visibility when required. The locator's backlight is controlled by an ambient light sensor and does not require adjustment by the user.

The transmitter's LCD backlight is activated whenever you press a key. The backlight will automatically switch off after a few minutes.

4.14 Bluetooth wireless

All RD8200 locators feature a Bluetooth wireless module as standard, providing the ability to connect to compatible devices such as iLOC enabled transmitters (Tx-10B), PCs, laptops or handheld devices running a compatible application.

Refer to Section 11 for further information about Bluetooth wireless connections and how to pair your devices.

NOTE: The RD8200 locator wireless features may be subject to national and or local regulations. Consult your local authorities for more information.

⚠ WARNING! Do not attempt any wireless connection in areas where such technology is considered hazardous. This may include: petrochemical facilities, medical facilities or around navigation equipment.

4.15 iLOC™ and SideStep™

iLOC is a standard feature of all RD8200 locators, and lets you control a Bluetooth enabled transmitter remotely from your locator.

With iLOC you can adjust the frequency and power settings, and use SideStep™.

iLOC commands are sent over a Bluetooth module that can operate at distances of up to 450m / 1400ft in direct line of sight.

SideStep changes the selected frequency by several Hertz and automatically sets the locator's locate frequency to match the transmitter's output frequency. This can be used to eliminate unwanted interference.

See Section 11 for a detailed explanation of iLOC.

4.16 SideStep*auto*™

The transmitter can be used to recommend a general-purpose locate frequency for the intended locate task by measuring the impedance of the target cable or pipe.

SideStep*auto* helps to improve locate accuracy by determining the best signal. SideStep*auto* can also help to prolong battery life.

SideStepauto operates only in Direct Connection mode.

Using SideStep*auto*

To enable SideStep*auto*:

Connect the transmitter to the target utility, then

1 Press the key to enter the menu

2 Scroll to the OPT F menu using the or keys

3 Press the key to enter the OPT F menu

4 Scroll through using the or keys until **START** is displayed

5 Press the key to start SideStep*auto* and exit the OPTF Menu

6 Press the key to exit the menu

NOTE: SideStep*auto* has to be enabled for each Direct Connection using the START option. At any time the user may manually change the frequency using the key

4.17 Transmitter power output

The transmitter supports several power output modes to help you select the optimal settings for your requirements whilst helping to prolong battery life.

Adjusting power output

NOTE: On iLOC enabled models, you can adjust the transmitter's power output remotely using the locator. For more information, refer to Section 11.

To adjust the power output:

1 Press the or keys to increase or decrease power output

Boost (Tx-10 & Tx-10B only)

Boost allows the Tx-10 transmitter to output its maximum output power. Boost mode can be set to operate for a specified period of time.

To configure boost:

1 Press the key to enter the menu

2 Scroll to the **BOOST** menu using the or keys

3 Press the key to enter the BOOST menu

4 Set the BOOST duration using the or keys. You can choose 5, 10, 15 and 20 minute periods or ON for continuous operation

5 Press the key to accept your changes and exit the BOOST menu

6 Press the key to exit the menu

To enable boost:

1 First configure the boost duration using the procedure above

2 Press and hold the key until **BOOST** appears on the transmitter LCD

3 The transmitter will automatically exit boost mode after the selected duration

To disable boost:

1 Press the key to disable boost

4.18 Transmitter Eco mode

When using alkaline D-Cells in Tx-5 and Tx-10(B) transmitter models you can extend the effective use of the batteries by enabling Eco mode.

In Eco mode the power output of the transmitter reduces when the batteries can no longer provide the required output power.

When Eco mode is active and the power output has been reduced, the display alternates between 'POWER' and the current output power level.

The transmitter will emit three beeps every time the power is reduced. It will then continue emitting two beeps each minute whilst it operates at a reduced power level.

To enable or disable Eco mode

1 Press the key to enter the menu

2 Scroll to the **BATT** menu using the or keys and enter it by pressing the key.

3 Scroll through the battery options using the or until **ALK** is displayed. Press the key.

4 Use the or until **ECO** is displayed and press the key to enable Eco Mode.

Or

Select **NORM** and press the key to disable Eco mode.

5 Press the key to exit the menu

4.19 Maximum Voltage

On high impedance applications such as small diameter cables, tracer wires, etc, sometimes it can be difficult to get a signal to flow when using the direct connection method. Increasing the output voltage of the transmitter can maximize the amount of signal coupled onto the utility.

The transmitter can operate in either low voltage (30V) or in high voltage (90V). In normal operating mode the transmitter will operate in low voltage mode.

⚠ Warning: When operating the transmitter in high voltage mode, always make sure that the transmitter is switched off when connecting or disconnecting direct connection leads.

To set maximum output voltage to 90 volts:

1. Press the key to enter the menu
2. Scroll to the **MAXV** menu using the or keys
3. Press the key to enter the MAXV menu
4. Set the MAXV to HIGH using the or keys
5. Press the key to accept your changes and exit the MAXV menu
6. Press the key to exit the menu

When in high voltage mode the transmitter will display a high voltage warning triangle.

Each time the transmitter is switched off the transmitter will revert back to the default low voltage setting.

4.20 Measure mode

The transmitter has the capability of providing impedance measurements by determining the resultant impedance across the crocodile clips of the Direct Connection lead while connected to the utility. These measurements can be useful when assessing sheath fault severity. It is also possible to measure potential voltage that may be present on utilities to warn of potentially dangerous or harmful voltages present.

In measure mode the measurement is derived from an AC signal applied to the utility from the transmitter

Impedance & voltage measurements

1. Connect the Direct Connection leads to the utility and switch on the transmitter.
2. Hold down the key until **MEAS** is displayed and the measuring icon is activated.

   The transmitter display will now indicate the voltage level measured across the connection leads.
3. Press the key once and the display will indicate the impedance measured across the connection leads.

   The measurement icon will display the following symbols:

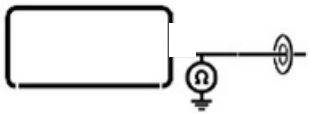

Figure 4.13 Impedance and voltage measurements

4. To exit **MEAS** mode hold down the key until the display reverts back to the normal operating screen.

Impedance measurements using active frequency

1. Connect the Direct Connection lead to the utility and switch on the transmitter.
2. Select the preferred frequency and output the signal.
3. Press the key once and the display will indicate the impedance measured across the connection leads and also the output power of the transmitter.
4. Press the key once to return to the normal operating screen.

4.21 CALSafe™

Usage logging equipped RD8200 locators can be set to disable them once they are beyond the expected service / calibration date.

When the unit is within 30 days of the service due date the unit will display at startup the number of days left. The locator will stop functioning on the service due date.

CALSafe™ is disabled by default. You can edit the CALSafe service due date, and enable or disable the function using

the RD Manager Online PC software package. Refer to the RD Manager Online operation manual for further information.

4.22 Usage-Logging

RD8200G logging and GPS locator feature a powerful data logging system which records all the instrument's critical parameters (including GPS position, if available) and warnings in its internal memory each second.

The automatic logging system is always active and cannot be disabled. Its memory is capable of storing at least 500 days of normal usage data – based on 8 hours' operation per day. Logs can be retrieved using the RD Manager Online PC application for usage analysis and survey validation. Refer to the RD Manager Online operation manual for further information.

4.23 UTIL mode

The RD8200G GPS locator **UTIL** mode can be used to set the utility and service type being located during a survey.

The full list of available utilities is:

Display	Utility / Type of marking
>GAS<	Gas
>TEL<	Telecom
>SEW<	Sewer
>TMA<	Temporary Markings
>H2O<	Potable Water
>PWR<	Power
>EXL<	Excavation Limit
>IRR<	Reclaimed Water
>CTV<	Cable TV

To select a utility:

If **UTIL** is enabled the locator will not start until a selection is made.

1. Press the key to turn on the locator:
2. The display will show the word **TICKT** followed by **UTIL**
3. Press the antenna key and use the or keys to select the desired utility or marking type
4. If required press the antenna key again and use the or keys to select **DIST** (for a service cable or pipe) or **TRANS** (for a main distribution cable or pipe).
5. Press the key to confirm your choices and to start the locator – you may have to press the key up to 3 times.

The selections are stored into its internal memory and can be viewed in the usage logs as mentioned in 4.22.

A utility can be switched from one type to another or the service type can be changed during a survey by a long press of the Survey Measurement key .

Enabling or disabling individual utilities:

1. Press the key to enter the menu
2. Scroll to the **ULIST** menu using the or keys
3. Press the key to enter the **ULIST** menu
4. Select a utility or marking type using the or keys
5. Press the to enter the menu of the utility type and use the or select **ON** or **OFF**
6. Press the key to accept your changes
7. Press the key again to exit the **ULIST** menu
8. Press the once again to exit the main **MENU**.

4.24 GPS (GNSS)

The RD8200 locator can be paired to an external GPS device or use its internal GPS module when fitted to detect and store its latitude, longitude and accurate UTC time alongside its locating data using RD Map™ or the automatic logging system (8200G model only).

The presence of GNSS data allows for the data to be mapped easily and to export and save the information directly into GIS systems.

For more details on connecting to and sharing data with an external device, refer to Section 10.

GPS menu

To enter the GPS menu:

1 Press the key to enter the menu

2 Scroll to the **GPS** menu using the or keys

3 Press the key to enter the GPS menu

Use the or keys to scroll through the 5 options:

- **RESET**: Select YES to reset the internal GPS (8200G GPS equipped model only)
- **INT**: Select this to use the internal GPS if present
- **EXTM**: Select this to use GPS from RD MAP+ (features need to be enabled in the app)
- **OFF**: Select this to switch off the internal GPS module and save battery

- **SBAS:** Select this to switch **ON** or **OFF** SBAS (Satellite-Based Augmentation System).

  SBAS can improve GPS accuracy, particularly in N.America

  EXIT: Select this to exit the GPS menu

4 Press the ⓕ key to accept your changes and exit the GPS menu

5 Press the ⏻ key to exit the menu

NOTE: When SBAS is ON the GPS system may take longer to lock

Internal GNSS 'GPS'

RD8200G GPS locator have an internal GNSS module. When internal GPS is enabled, it will automatically try to "lock" onto a number of satellites as soon as the RD8200G unit is turned on.

The time required for the GPS module to lock onto the GPS system varies depending on the length of time that has passed since the last time the locator was used, and on the presence of obstacles (like high buildings, trees, etc.) that obstruct sight to the sky.

If the unit has not been used for several days the time to first fix may take up to several minutes.

The RD8200G locator display provides a number of icons indicating the presence of an internal and active GPS and when this has locked to the GPS system, the quality of the signal received or numbers of satellites received.

The accuracy of the GPS module is affected by the number of satellites received and best accuracy is only reached when the signal quality is at its maximum.

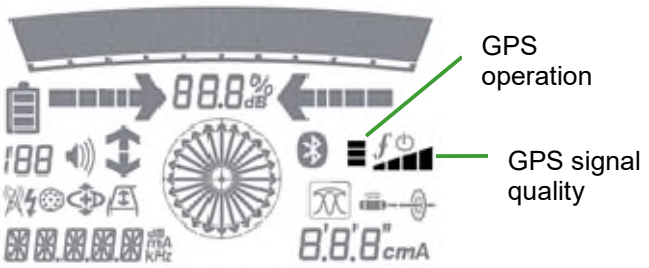

Figure 4.14 GPS Icons

The LCD GPS operation icons provide visual information about the status of the internal GPS module:

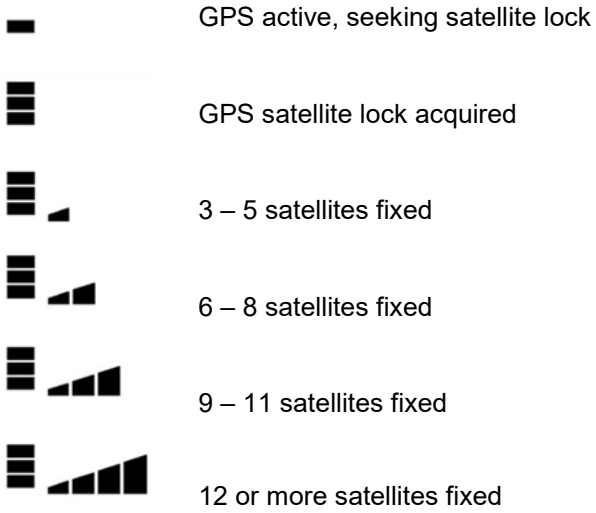

Figure 4.15 GPS status and satellites in view

Section 5 - Locating cables and pipes

This section introduces the principals and techniques of locating buried cable and pipe utilities with the RD8200 system. For more information on the theory of cable and pipe location, refer to *The theory of buried cable and pipe location* which is available to download from www.radiodetection.com

5.1 Frequencies

The RD8200 locator supports a range of active and passive frequencies. It also supports 5 additional user definable frequencies in the range of 50Hz to 999Hz.

For a complete list of supported frequencies, refer to the RD8200 Locator Specification datasheet.

Passive frequencies

Passive frequency detection takes advantage of signals that may be present on buried metallic conductors. The RD8200 locator supports four types of passive frequencies: **Power**, **Radio**, **CPS** and **CATV** signals.

You can detect these frequencies without the aid of a transmitter if they are present on the utility you are surveying.

Power Filters™

RD8200 locators allow you to take advantage of the harmonic signals found on power networks.

When strong or interfering power signals are present, accurate tracing of a target cable can be challenging. Power Filters™ allow you to establish if a single large power signal comes from one source or from the presence of multiple cables. The different harmonic characteristics of the detected lines can then be used to trace and mark their route.

Once in Power Mode, press the key to switch out of Radiodetection's sensitive Power Mode and scroll through the five individual Power Filters.

The use of an individual Power Filter harmonic can also allow you to locate power lines in situations where the total signal would otherwise be too large.

Custom frequencies

You can set up to 5 additional; custom frequencies in your locator for use on specific networks.

Frequencies in the range of 50Hz to 999Hz can be set using RD Manager Online.

CAUTION: When using custom frequencies in the range of 692Hz to 704Hz or 981Hz to 993Hz the locator audio may interfere with the locator and must be turned off.

NOTE: Some frequencies (e.g. 440Hz) may be reserved for specific applications in your country and permission from the relevant operator(s) may be required for their use.

Contact your local Radiodetection sales office or distributor if you require help in identifying these operators.

Refer to the RD Manager Online operation manual for more information on how to set up custom frequencies.

Active frequencies

Active frequencies are applied to a buried conductor using the transmitter. The transmitter can apply a signal using three methods:

Direct Connection

In Direct Connection, you connect the transmitter output directly to the utility. The transmitter will then apply a discrete signal which you can locate using the locator. This is the preferred method of applying a transmitter signal to a utility and in the majority of applications will apply a stronger signal to the utility, which may increase the locate distance.

To directly connect to a non-energized conductive utility:

1. Switch the transmitter off
2. Connect the Direct Connection lead into the transmitter accessory socket
3. Clip the red connection lead to the utility ensuring that the area around the connection is clean and that a positive connection is achieved
4. Clip the black connection lead as far away as possible and at 90° to the ground stake or suitable ground point nearby ensuring that a positive connection is achieved
5. Switch the transmitter On
6. The display will show the Direct Connection lead connected icon

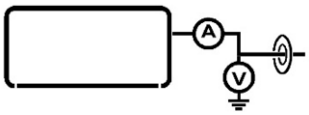

Figure 5.1 Direct Connection lead icon

For more information about other signal connection accessories, refer to Section 12.

⚠ WARNING! Direct Connection to live conductors is POTENTIALLY LETHAL. Direct connections to live conductors should be attempted by fully qualified personnel only using the relevant products that allow connections to energized lines.

⚠ WARNING! The transmitter is capable of outputting potentially lethal voltages. Take care when handling the terminals, connection leads and ground stake, notify other technicians working on the line of the hazard and guard exposed conductors to prevent accidental contact.

⚠ WARNING! Ensure the TX transmitter is switched OFF before making a connection and before disconnection of the direct connection lead to a service.

Induction

In this mode of operation, the transmitter is placed on the ground over or near the survey area. If a Direct Connection lead or signal clamp is not plugged into the transmitter, it will automatically go into induction mode. In this mode, only frequencies applicable for induction mode will be made available as the ⓕ key is pressed.

Once activated the transmitter will induce the signal indiscriminately to any nearby buried conductors.

Please note that these signals will also be airborne and it is advisable to keep the distance between the transmitter and locator at least 10m / 30' – this distance may need to be increased, particularly if depth measurements are taken.

Signal clamp

An optional signal clamp can be connected to the transmitter and clamped around a cable or pipe to apply the transmitter signal. This method of applying the transmitter signal is particularly useful on insulated live wires and removes the need to disconnect the supply to the cable. Clamps are available up to 8.5" / 215mm in diameter.

⚠ WARNING! Do not clamp around uninsulated live conductors

⚠ WARNING! Before applying or removing the clamp around a power cable, ensure that the clamp is connected to the transmitter at all times.

5.2 Choice of frequency for active location

The choice of signal frequency is an important factor for effective tracing and identification of buried lines, and there is no single frequency that covers all conditions. For simple instruments to be used by relatively non-technical personnel, there is no option but to make a compromise, and choose a single frequency high enough to give good performance in the induction mode, but not so high that it will couple too easily into unwanted lines. Active signals between 8kHz and 33kHz are commonly used for these applications. For more comprehensive equipment for problem-solving by technically competent technicians, a range of frequencies may be provided. Typical examples of these and reasons for their use are illustrated below.

512Hz

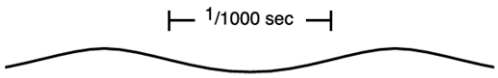

Figure 5.2 512Hz active signal

This low frequency is most useful for line tracing and identification over long distances. It does not couple easily to unwanted lines **however** it is too low for induction, and it falls within the band of power frequency harmonic interference.

8kHz

Figure 5.3 8kHz active signal

This medium frequency is the most useful general-purpose signal, high enough for induction, outside the power frequency interference band, and with limited coupling to wanted lines **however** it may not be high enough to impose a strong signal on small diameter line like telecom cables.

33kHz

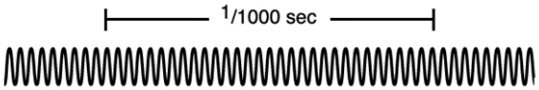

Figure 5.4 33kHz active signal

This higher frequency is easily applied by induction to most lines, so is very useful for initial search. It travels on small diameter line **however** it couples more easily to unwanted lines, and loses its strength over shorter distances than lower frequencies.

100kHz and Over

Figure 5.5 100kHz active signal

This very high frequency range deals with the difficult cases – induction onto small diameter lines in dry sandy soil, and short lengths of cable. It is very easy to apply by induction **however** it couples very easily to unwanted lines, and does not travel far.

For more information see Section 5.1, visit the **Knowledge Base** section in support.radiodetection.com or refer to the application note "The theory of buried pipe location", which is available as a free download from https://www.radiodetection.com/en-gb/cable-and-pipe-location-theory.

Selecting frequencies

It is important to select the correct or appropriate frequency for your particular application. For more information refer to the application note "*The theory of buried cable and pipe*

location", which is available as a free download from https://www.radiodetection.com/en-gb/cable-and-pipe-location-theory.

To select a frequency on the locator:

1 Press the key to cycle through available frequencies

2 Alternatively, hold down the key and press the or keys to cycle up or down the range of frequencies

If locating using an active frequency you must also set your transmitter to output the matching frequency.

You can change your transmitter's output frequency manually using your transmitter's keypad or automatically using iLOC (Bluetooth transmitters only).

To manually select a transmitter output frequency:

1 Press the key to cycle through available frequencies

To change frequencies using iLOC, refer to Section 11.

NOTE: Some frequencies require that you connect an accessory, for example an A-Frame, before the frequency is available.

5.3 Antenna modes

The RD8200 system supports five antenna modes, exclusively dedicated to locating cable and pipes, and to suit your particular application or the local environment. These are:

- Peak mode
- Peak+ mode
- Guidance mode
- Broad Peak mode
- Null mode

Peak mode

Peak mode provides the most sensitive and accurate mode for location and depth measurement. It provides a sharp Peak response with a corresponding small decrease in sensitivity. Peak mode cannot be disabled using the menu.

In Peak mode the following indicators are displayed by the LCD:

- Depth
- Current
- Signal strength
- Compass

To select Peak mode:

1 Press the key until the Peak mode icon is displayed on the LCD

NOTE: The depth and current values will display automatically, although these values should not be considered accurate until the locator is directly over the target line.

Peak+™ mode

Peak+™ mode combines the accuracy of the Peak bargraph with a choice of Guidance or Null directional arrows.

Guidance arrows provide visual indication of the direction to the target utility, and are designed to get you close to the Peak position faster, before using the Peak bargraph to pinpoint the target utility,

Using Null arrows allow you to check for distortion before marking a point, and should be used when accurate locate measurements are required.

Switching between arrow types:

When in Peak+ mode, press and hold the key to toggle between Guidance and Null arrow types.

You can also select the default arrow type in the locator menu:

1 Press the key to enter the menu

2 Scroll to the **ARROW** menu using the or keys

3 Press the key to enter the ARROW menu

4 Select NULL or GUIDE using the or keys

5 Press the key twice to return to the main locate menu.

When using Guidance arrows:

Use the proportional arrows to guide the locator along the path of the target cable or pipe. To accurately locate the center point of the target utility, for example to mark a point or take a survey measurement, use the Peak bargraph to pinpoint the Peak position.

When using Null arrows:

Use the arrow heads to place the locator above the NULL point. If the Peak response is not at a maximum, then this is evidence of a distorted field. If the Peak response is at its maximum level where the Null point is located, then there is no or very limited distortion present.

In Peak+ mode the following indicators are displayed by the LCD:

- Right and left arrows
- Signal strength
- Compass
- Current
- Depth

To select Peak+ mode:

1 Press the key until the Peak+ mode icon is displayed on the LCD

Guidance mode

Guidance mode offers good performance in distorted fields and provides three indicators to guide the user towards the target line.

The Left and Right Proportional Arrows become shorter as the locator approaches the target, and the Target Position Needle will move towards its central position. The Signal Strength reading will also reach its maximum value when the locator is positioned above the target.

Any deviation from all three indicators showing the target position in the same location could signal the presence of a distorted field.

In Guidance mode the following indicators are displayed:

- Proportional left and right arrows
- Target Position Needle
- Signal strength
- Gain
- Compass
- Current
- Depth

To select Guidance mode:

1 Press the key until the Guidance mode icon is displayed on the LCD

Broad Peak mode

In Broad Peak mode, the RD8200 locator uses a single antenna to detect with higher sensitivity over a wider area than Peak mode. This is particularly useful for locating deep utilities quickly and indiscriminately. In Broad Peak mode the following indicators are displayed by the LCD:

- Depth
- Current
- Signal strength
- Compass

To select Broad Peak mode:

1 Press the key until the Broad Peak mode icon is displayed on the LCD.

Null mode

Null mode is used to verify a locate signal in environments with limited or no interference or distortion. Null mode gives a null response when it is directly over the line.

In Null mode the following indicators are displayed by the LCD:

- Signal strength.
- Compass.
- Right and left arrows.

To select null mode:

1 Press the key until the null mode icon is displayed on the LCD

The sharp, null response can be easier to use than the Peak response but is vulnerable to interference and should not be used for locating, except in areas where there is no interference present.

Guidance Mode offers improved performance in such conditions while Peak+ mode can combine the Peak bargraph with Guidance arrows to combine fast and accurate locate tools.

5.4 Compass

The LCD compass provides a visual indication of the direction of the target cable, pipe or sonde. The compass is available for all frequencies apart from Power, Radio and Passive.

5.5 Trace

Line tracing can be accelerated by switching the locator to Guidance mode.

Move the locator left and right while walking along the path of the line to place the target position Needle directly over the line. As you move the locator over the line, the left and right arrows (and an accompanying tone) will indicate if the target line is to the left or right of the locator.

5.6 Pinpoint

Locating a target line in Peak, or Peak+, mode accurately defines the position of a target line after it has been traced and its position is approximately known. Start with medium output power from the transmitter, medium frequency on the transmitter and locator, and Peak or Peak+ mode on the locator.

Set the locator sensitivity to approximately 50% by pressing the or key

NOTE: it may be necessary to adjust the sensitivity level throughout the pinpointing to keep the bar graph on scale.

1 With the antenna perpendicular to the line, make traverses across the line. Define the point of maximum response.

2 Without moving the locator, turn it round as if it is on a pivot. Stop at the point of maximum response.

3 Hold the locator vertical with the antenna just above the ground and move the locator from side to side across the line. Stop at the point of maximum response.

4 With the end of the antenna close to the ground, repeat steps 2 and 3.

5 Mark the position and direction of the line.

Repeat the steps of the procedure to increase pinpoint accuracy.

If using Peak+ mode, switch to null arrows by pressing and holding the key. Alternatively switch to Null antenna mode.

Move the locator to find the Null position. If the position of the Peak and the Null pinpoints correspond, it can be assumed that the pinpoint is accurate. The pinpoint is not precise if the marks do not correspond, but both marks will show an error to the same side. True line position will be close to the Peak position.

The line lies half the distance to the other side of the Peak position as the distance between the Peak and the Null positions.

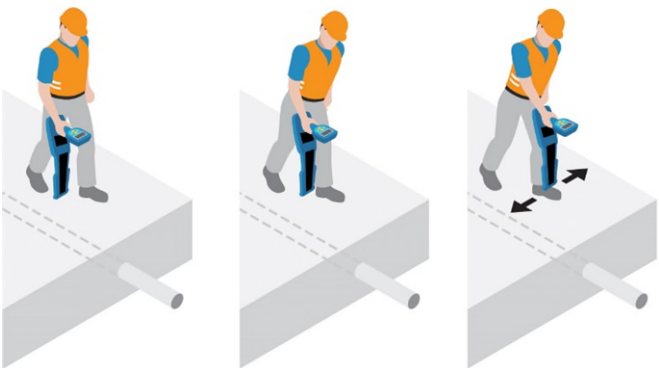

Figure 5.2: Pinpointing a target line

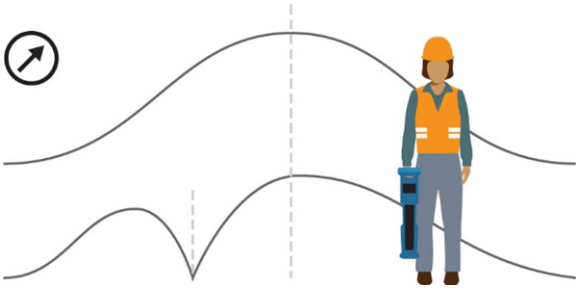

Figure 5.3: Pinpointing with Peak and Null indicators

5.7 Sweep and search

There are a number of techniques available for locating unknown lines in an area. Using these techniques is particularly important before conducting any excavation work to help ensure that buried lines are not damaged.

Passive sweep

A passive sweep is used to locate Power, Radio, CATV or CPS signals that may radiate from buried conductors.

To perform a passive sweep:

1 Press the key to select the passive frequency you wish to locate. You can select from the following passive frequencies:

- Power
- Radio
- CATV (Cable TV)
- CPS (Cathodic Protection System)
- PASSIV (simultaneously detects Power and Radio signals where present)

2 Adjust the sensitivity to maximum; reduce the sensitivity to keep the bar graph on scale when there is a response.

3 Traverse the area in a grid search, at a steady walk, and hold the locator comfortably with the antenna in line with the direction of movement and at right angles to any lines that may be crossed.

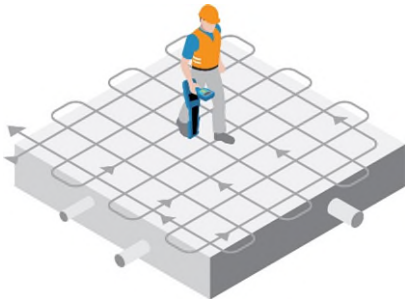

Figure 5.4: Passive sweep

Stop when the locator response rises to indicate the presence of a line. Pinpoint the line and mark its position. Trace the line out of the area being searched. Resume grid search in the area.

In some areas there may be a confusing amount of 50 / 60Hz power signals. Lift the locator 50mm / 2” from the ground and continue the sweep, or use the key to switch from Power mode and use Power Filters to discriminate individual lines.

Switch the locator to Radio Mode. Increase sensitivity to maximum and repeat the above grid search procedure over the area. Pinpoint, mark, and trace out any lines that are located.

In most, but not all areas, radio mode will locate lines that do not radiate power signals and a grid search should be

made in both power and radio modes or in Passive Avoidance mode.

Inductive search

An inductive search procedure is a more certain technique for locating unknown lines. This type of search requires a transmitter and locator and two people. This type of search is referred to as a 'two person sweep'. Before starting the sweep, define the area of search and the probable direction of lines crossing the area. Ensure the transmitter is switched on in induction mode.

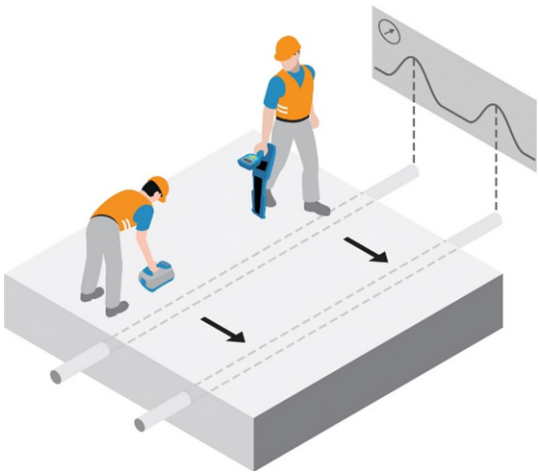

Figure 5.5: Inductive search

The first person operates the transmitter and the second person operates the locator. The transmitter induces a signal onto lines as it passes over them and the lines are then detected with the locator at a suitable distance away from the transmitter (around 15 meters / 50 feet – although this will depend upon the level of induction power used.)

Hold the transmitter with its length aligned with the assumed direction of any lines.

The second person holds the locator at the start of the area to be searched and with the locator antennas at right angles to the probable direction of the buried lines. Set the locator sensitivity level as high as possible without the locator picking up any airborne signals directly from the transmitter.

When the transmitter and locator are in line both operators start to move forward in parallel. The operator with the locator sweeps it backwards and forwards, keeping the locator vertical, as they proceed in parallel with the transmitter. This method allows for misalignment of the transmitter, locator and buried line.

The transmitter applies the strongest signal to the lines directly below it, which are then located with the locator. Move the transmitter from side to side to establish the highest signal which indicates that the transmitter is also directly above the line(s).

Mark the ground at the point of each Peak signal detected with the locator. Repeat the search along any other possible paths of lines. Once the positions of any lines have been marked, reverse positions, place the transmitter over and along each line in turn, and trace the line out of the search area.

5.8 Nulling Out

Sometimes it is possible for some utilities to be masked by other utilities and this can happen when one or more utilities are in close proximity to each other or when stronger signals may radiate. In certain applications and congested areas, the 'Nulling' technique allows operators to eliminate the induction signal directly beneath the transmitter but at the same time induces the transmitter signal onto other nearby utilities that previously have not been able to be located

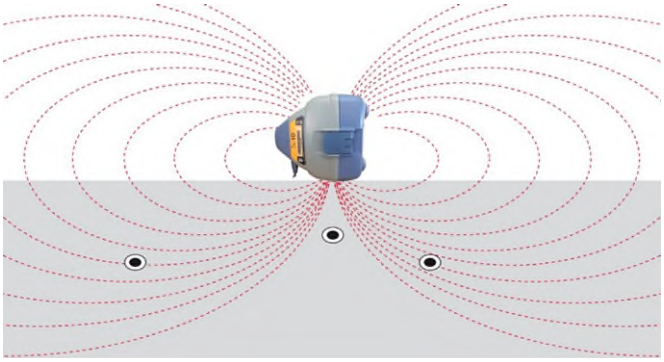

Figure 5.6 Nulling Out effect

Two persons Nulling Out technique:

1. Place the transmitter close to the services you wish to trace (a parallel sweep may be used for this) and using the locator at a distance of approximately 10m/30' from the transmitter, pinpoint the strongest signal.
2. The sensitivity on the locator is adjusted so that the bar graph response is approximately 75%
3. Release the side support arm.
4. With the locator over the centre of the signal the second operator should hold the transmitter at waist level, with the transmitter on its side – release support arm pointing down.
5. The transmitter is then moved from side to side to find the 'Null' spot between two detectable signals; the transmitter should then be lowered towards the ground keeping it in the 'Null' spot.
6. At ground level we are ideally looking for a 'Null' no wider than 50mm/2" (Sensitivity on the locator may need to be adjusted to achieve this).
7. With the transmitter left on the ground in the 'Null' spot. The locator is used to check for additional signals either side of the 'Nulled' signal.
8. Should the ground be uneven the transmitter may be turned across the line of the service provided the release support arm remains facing downwards. (this will improve the stability of the unit)

One person Nulling Out technique

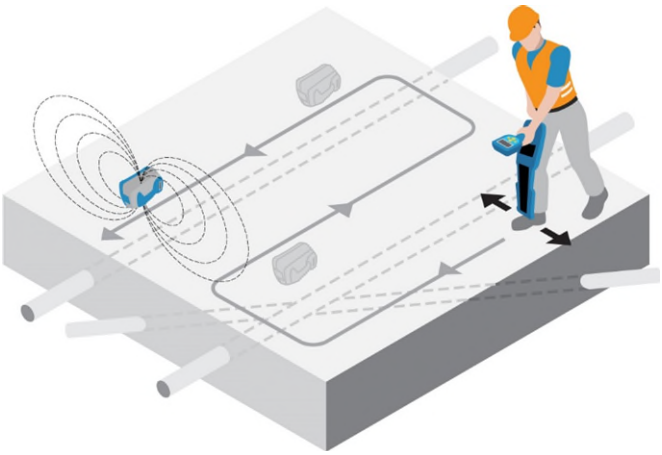

Figure 5.6 Nulling Out - Single person sweep

1. Lay the transmitter on its side using the side support arm.
2. Sweep the area around the transmitter with the receiver at least 10m/30’ from it.
3. Reposition the transmitter at 5m/15’ intervals around the area and repeat step 2
4. Stop when there is a response
5. Pinpoint and mark any lines
6. Trace the lines out of the area

Section 6 - Depth and current readings

6.1 TruDepth™

The RD8200 locator provides automatic depth of buried cables, pipes and sondes and when the locator is correctly orientated above the target line or sonde.

Current readings are also displayed simultaneously if the locator is orientated correctly (feature not available in sonde or passive frequency modes).

Depth and current readings are automatically displayed simultaneously, but if the locator is not correctly orientated neither reading will be displayed.

Depth range and accuracy vary depending on the makeup and type of target utility (e.g. cable, pipe or sonde), its depth and external environmental factors like electromagnetic noise, ground conditions and interference.

⚠ WARNING! The accuracy of depth measurement is subject to a number of factors and is meant as a guide only. Never use the depth measurement to define mechanical digging depths. Always follow local safe digging guidelines.

The depth measurement is to the center of the pipe, cable or sonde. The best readings are typically detected from 'active' signals output by a transmitter rather than from passive sources.

The RD8200 locator is capable of determining cable depth when locating some passive power signals. However passive signals on lines are less suited for measuring depth because accuracy can be compromised by interference- e.g due to the passive signal being present on more than one line.

⚠ WARNING! Do not make depth measurements near bends or tees in the line. Go at least 5m (16ft) from a bend for best accuracy.

TruDepth for buried conductors or sondes

TruDepth and Compass

It is important to note that the RD8200 locator will only display depth and current (in applicable modes) when the locator is correctly orientated above the target line, cable or sonde. To ensure the locator is correctly orientated, use the Compass feature.

When locating lines, make sure the Compass display is in the North / South orientation position.

When locating sondes (see Section 12), make sure the Compass display is in the East / West orientation.

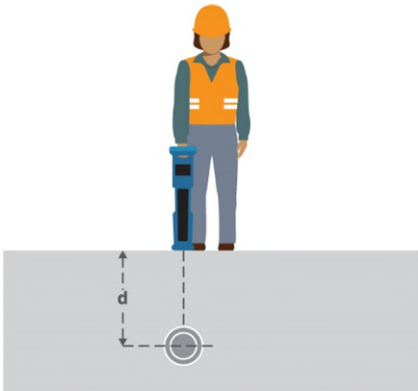

Figure 6.1: Taking a depth reading

To minimize signal distortion, do not apply the signal by induction. If Direct Connection or signal clamping is not possible, place the transmitter in induction at least 15m (50ft) from the point of any depth measurements.

Depth measurements may not be accurate if there is audible interference or if part of the transmitter signal has coupled to a nearby line.

Confirming the Peak position coincides with a Null position indicates that the position is suitable for making a depth estimate.

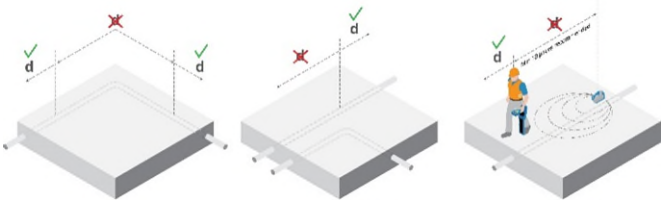

Figures 6.2: Depth readings

- Pinpoint the target line accurately with the locator
- Check the locator is directly over the line, the antennas are at right angles to it and the locator is vertical. Adjust the sensitivity level to bring the bar graph indication to approximately 50%

If the ground appears to radiate a strong field, perhaps near a radio station, check depth by holding the bottom of the antenna 50mm (2") above the ground and subtract this reading from the indicated depth.

6.2 Verifying depth measurements

Check a suspect or critical depth reading by lifting the locator 50mm (2") above the ground and repeating the measurement. If the measured depth increases by the same amount it is a good indication that the depth reading is correct.

When locating for a conductor or sonde, depth measurements should be precise to ±3% if conditions are suitable. However, you may not always know if the

conditions are suitable so the following techniques should be used to check critical readings:

- Check that the route of the line is straight for at least 2 meters (6 ft) to either side of the measurement point.
- Check that the signal response is reasonably constant over the 15-meter distance to the transmitter and make depth measurements to either side of the original point.
- Check that there are no adjacent lines carrying a significant signal within 1 to 2 meters (3 to 6 ft) of the target line. This is the most common source of error of depth measurements as a strong signal coupled to an adjacent line can often introduce ± 50% error.
- Make several depth measurements at points slightly displaced from the line's apparent position. The shallowest indication will be the most accurate and will also indicate the line's position most accurately.

Checking depth accuracy

This paragraph describes several quick and easy ways of verifying that the depth reading on the locator when used for markers or conductors and sondes is within acceptable limits.

Refer to this if you are getting inaccurate depth readings from a cable or pipe for which you know the approximate depth. Inaccurate depth readings could be the result of the locator picking up a stronger signal such as another cable or pipe running in close parallel to the target pipe or cable.

There are two ways of checking the calibration of the locator in the field. Both methods require the use of a transmitter:

Method 1

Place the transmitter on top of a non-metallic object, 18" / 500mm in height or more, on the ground and away from any buried lines. Switch the transmitter on in induction mode. Hold the locator with the blade horizontal and pointing towards the front of the transmitter and approximately five meters from the front of the transmitter.

1 Switch the locator on.

2 Select the same frequency as is selected on the transmitter but make sure that this frequency is in the sonde mode.

3 Move the locator from left to right and when the bargraph reading is at its Peak note the depth as indicated on the locator. Measure the distance from the base of the locator to the center of the transmitter using a tape measure.

4 Compare this reading with the depth reading on the locator.

The locator can be considered accurate if the difference between the depth reading on the locator and the distance measured with the tape is less than 10%.

Method 2

1 Apply a signal to a cable or pipe of known depth.

2 Locate the cable or pipe; the locator will display depth on the LCD automatically.

3 Compare the depth reading on the locator with the actual depth.

NOTE: The accuracy of depth measurement is subject to a number of factors and is meant as a guide only. Exercise caution when performing any excavation.

6.3 Current readings

Identifying a utility using current measurements

Measuring current value on a line helps confirm the identity of the line and may provide information about the condition of cable insulation or pipe coating.

About current measurements

The transmitter applies a signal or current onto a target line. The current decreases in strength as the distance from the transmitter increases. This rate of decrease depends on the type of line and on soil conditions. Regardless of the type of line and the frequency being used the rate of decrease should be regular with no sudden drops or changes. Any sudden or abrupt current change indicates that the line or its condition has changed.

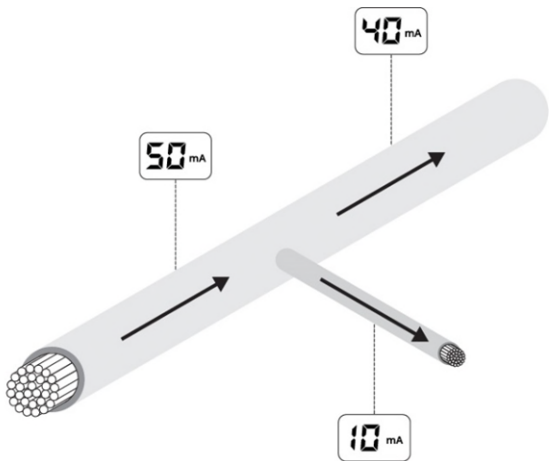

Figure 6.3 Current readings

In congested areas, where there is more than one line, the locator may sometimes detect a stronger signal from an adjacent line to which the signal has coupled or shares common grounding because it is nearer the surface. Although current measurement compensates for depth, signal response will be less as the depth increases.

The line with the highest current measurement, rather than the line giving the strongest response, is the target line to which the transmitter signal has been connected.

Measuring current provides useful information about the position of bends and intersections. Measuring current after a tee will indicate the main line that pulls more current along its greater length.

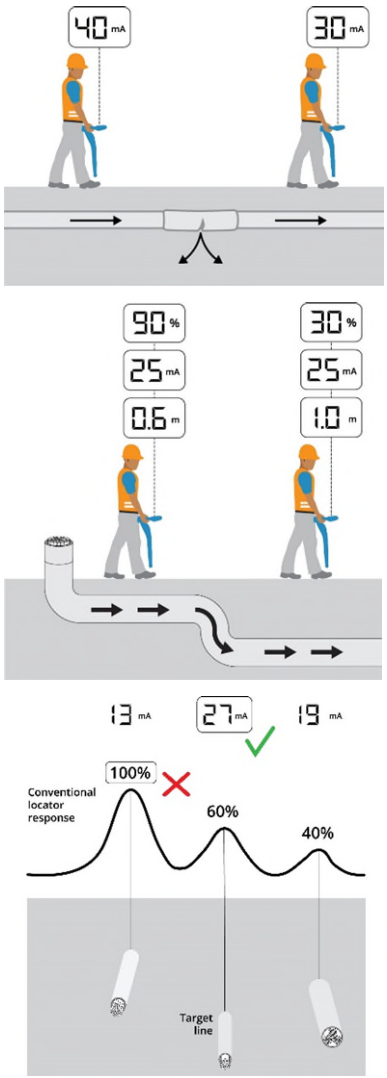

Figures 6.4 – 6.6 Taking current readings

Applying a transmitter signal

The transmitter signal can be connected, clamped or induced to the target line in the same way as the signal for line tracing is applied.

⚠ WARNING! Direct Connection to live conductors is POTENTIALLY LETHAL. Direct Connections to live conductors should be attempted by fully qualified personnel only using the relevant products that allow connections to energized lines.

Signal current measurements

Pinpoint the line and confirm the accuracy of the Peak pinpoint with null arrows. Check the locator is directly over the line, with the antennas at right angles to it and vertical.

The locator will automatically estimate and display depth on the LCD.

A signal coupled to a nearby line may distort the accuracy of the measurement. If the accuracy of the reading is suspect, sweep the area to check if other nearby lines are radiating the signal. If other signals are causing interference, it may be necessary to make the current measurement at another point along the line.

Both antennas are needed to make a current measurement and locator accessory antennas such as a normal clamp or stethoscope cannot be used. Because current measurement is a function of depth, it is only available in the locating modes. It is also available with Current Direction (CD) clamps.

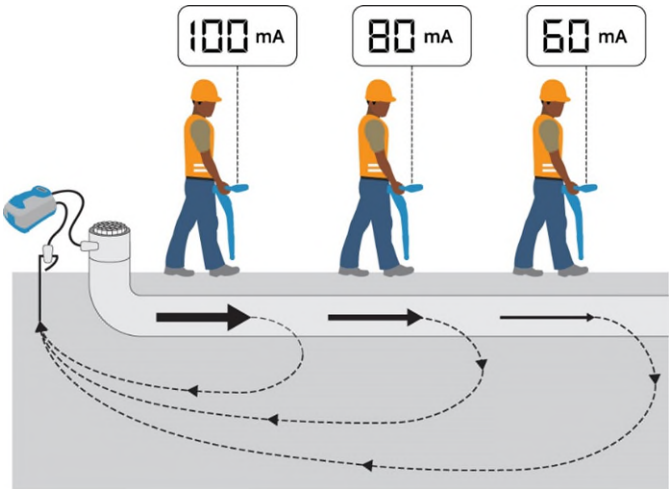

Figure 6.7: Current readings using transmitter signals

Section 7 - Locating techniques

7.1 Identifying target utilities

Induction

If several conductors are running in parallel, and it is not possible to connect a transmitter, each line may be located separately. Proceed as follows:

1 Perform a sweep of the area to find the position and number of conductors in the area.

2 Map the direction in which the conductors are going.

To trace the lines:

1 Select induction mode on the transmitter.

2 Select the same frequency as on the locator.

3 Place the transmitter on its side and in line with a conductor

4 Ensure the conductor is directly below the transmitter

5 This will 'null out' the signal directly below the transmitter, placing no signal on that conductor, and enable the other conductors to be located

6 Locate each conductor and mark its position

7 Move the transmitter down the route and continue locating and marking.

8 Trace each conductor out of the search area until the target can be accurately located.

Unwanted signal coupling

Unwanted coupling of the signal from the target line to another nearby line is one of the most common location problems. It leads either to an error in the marked position and depth of the target line or to marking the wrong line. A certain degree of coupling is unavoidable in many situations but there are ways in which a careful user can reduce coupling and increase location reliability.

- Avoid applying the signal by induction. The signal may be coupling to more than one line directly from the transmitter. Use the signal clamp where possible.
- Identify points where lines may be bonded or in close proximity to each other. Work toward these points rather than away from them. For example, if gas and water pipes are bonded within a building, apply the signal at the valves or access points in the road rather than in the building.
- Reduce coupling to a parallel line by using a low signal frequency where available
- Return signal flowing on another line. Use a double-ended connection to by-pass the ground return if possible
- Choose a signal application point where the line is furthest from other lines and not in a congested area
- When using single-ended connection, site the ground stake as far from the target line as possible and away from other buried lines
- Avoid using existing structures for ground connections; other buried lines may be bonded to them
- A bad ground connection or just laying the ground lead on the surface at right angles to the line may result in less coupling than a good ground provided long distance tracing is not required.

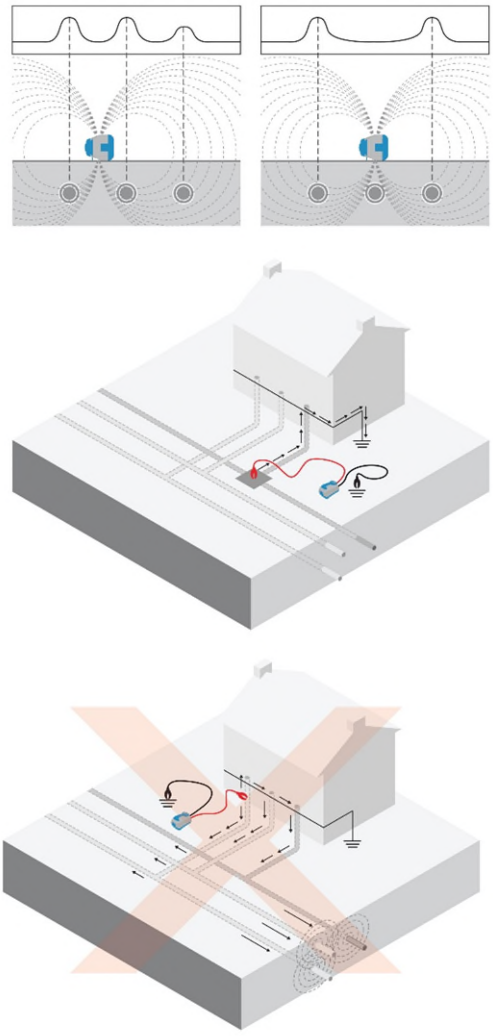

Figures 7.1 – 7.4: Nulling utilities & interference from services

7.2 Signal & ground connection

Manhole covers

Sometimes when locating, it is not possible to insert the ground stake into the earth, for example, when locating on hard ground such as roads. In this case, the ground return can be made by attaching the ground lead to the metal frame of a manhole.

Using lighting columns

Direct Connecting to a metal, street-lamp column is almost as effective as connecting to the cable sheath itself. Normally the cable sheath is bonded to the metal column, therefore a simple connection onto the column enables the user to locate the street lighting quickly and safely without having to call out a technician from the lighting company.

If the lighting column is made from concrete make the transmitter connection to the cable sheath unless the cable is earthed to the inspection doorframe. Connection to the cable sheath applies the transmitter signal for a considerable distance enabling the locator to trace cables feeding illuminated street furniture as well as other street lights.

⚠ WARNING! The live cable connector is for use only by operators licensed or permitted to work on live cables.

The use of a street light column as a means of applying a signal to other power cables on the same electric circuit is a possibility. The signal may be weak using this method because it may have travelled some distance back to the sub-station and out again on the other system. With the locator used on a high sensitivity setting it is often possible to locate a cable, which would otherwise have been difficult or inconvenient to energize with the transmitter signal.

Finding a good ground point

When using a Direct Connection, it is important to get the best possible grounding for the transmitter. This provides the lowest resistance ground path and the best output signal. If it is not possible to use the ground stake the following are examples of good alternative ground points:

- Metal manhole covers
- Metal drainage grates
- Metal railings
- Metal fence posts

7.3 Double-ended connections

Large diameter water pipes and gas distribution pipes that are laid in sections sometimes have insulated joints between the sections and can be difficult to locate using a single ended connect. This is because when using a single ended connection ground return, signals can often cause confusion by returning to the transmitter along other lines. The problem sometimes occurs when return signals appear stronger than on the target line, usually because the target line is deeper than the line carrying the return signal, or the return path may be a better electrical conductor than the target line.

Applying a double-ended transmitter connection is a useful technique for positively tracing and identifying a target line in a situation such as a heavily congested industrial site, provided there are access points at each end of the line.

Making a double-ended connection

Connect the transmitter to an access point on the target line. The transmitter ground is connected with a long cable to another access point further along the line. A complete circuit is achieved without using ground as a current return path. The long cable should be kept as far away as possible from the expected route of the line.

This method of applying the transmitter signal is ideal for positive identification of a target line. When a connection has been made to two points on the same line, the same level of current should be detectable around the circuit. The locator display should remain constant if the depth of the line does not change.

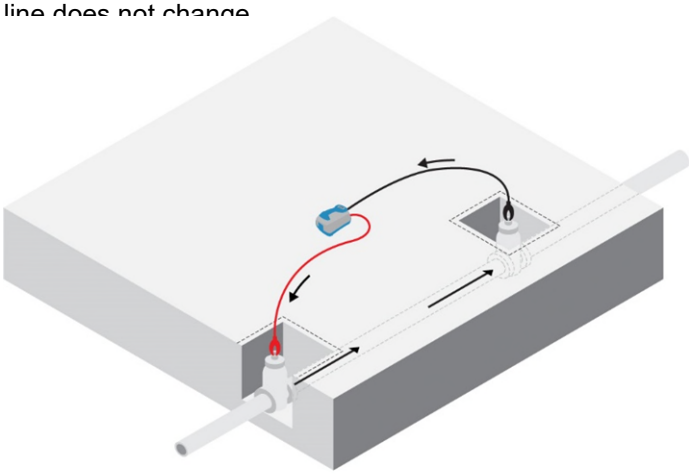

Figure 8.5: Making double-ended connections

Section 8 - Fault-finding

8.1 About fault-finding

RD8200 locators are capable of locating cable to ground faults caused by damaged cable sheaths and can also be used to locate damage to insulation on pipelines. This process is known as Fault-Finding and uses specific fault find signals applied to the target.

Fault find signals can only be applied using Direct Connection method.

The A-frame accessory is used to locate cable sheath faults on power and telecom cables or insulation faults on pipelines. To use Fault-Find you will need the following equipment:

- RD8200 locator
- Tx-5 or Tx-10 transmitter
- Accessory A-frame with connecting lead
- Direct connection lead and earth stake

There are 2 types of signals that can be used for fault finding:

- 8K Fault Find – useful for sheath faults on cables but can also be used on pipelines over shorter distances.
- CD Fault Find (only available on Tx-10) – this low frequency signal is very useful on pipelines and particularly useful on long distance pipelines. CD can also be used for locating sheath faults on cables.

8.2 Preparation

Using RD8200 standard locating techniques locate the cable or pipe for a short distance and trace and mark its route. Remove all earth bonds from the line to be traced during the fault-finding survey. If there are any earth bonds along the path the fault find signal may direct the user to this location as this will be the preferred path for the fault find signal to leak away into the ground and may result in the fault not being located.

Connecting the transmitter

1 With the transmitter switched off connect the Direct Connection lead into the transmitter accessory socket

2 Clip the red connection lead to the cable, cable sheath or pipe ensuring that the area around the connection is clean and that a positive connection is achieved

3 Extend the black connection lead as far away as possible at 90° to the probable route of the target cable and clip the connector to the ground stake ensuring that a positive connection is achieved

NOTE: Always connect the black connection lead to a ground stake and not a water pipe or buried cable, as these may carry the signal.

Reference readings

It is good practice to obtain a reference reading from the ground stake before you attempt to locate a fault on a target line. Reference readings help to provide the following information:

- Severity of fault
- Survey interval

Before taking the reference reading set up the transmitter and locator as follow:

On the transmitter:

1 Select a fault-finding frequency using the ⓕ key

2 Use the ⇧ or ⇩ keys to increase or decrease the output signal level

3 If required, you can use the BOOST setting if the fault is located on a high resistance cable or if the cable is long

⚠ WARNING! By selecting 8KFF the transmitter will have the ability to output high voltages and a high voltage warning icon will appear on the transmitter's LCD.

On the locator:

4 Connect one end of the connection lead to the A-frame socket

5 Connect the other end to the locator accessory socket

6 The locator will automatically recognize the A-frame and display the A-frame icon on the LCD

7 Select a fault-finding frequency using the ⓕ key

NOTE: If the locator and transmitter are iLOC enabled then you can remotely control the transmitter using the locator. See Section 11 for more information.

Obtaining a reference reading:

Position the locator approximately 2m (6 feet) from the ground stake and push the A-frame spikes into the ground with the green spike towards the ground stake

Attach the locator to the A-frame by the retention hook. (If you are holding the locator separately, make sure that the locator is in line with the A-frame and is pointing towards the green spike.) The fault direction arrow should be pointing away from the ground stake. If it is not, make sure that the

transmitter is connected correctly (red connector to the cable and black to the ground stake).

Take the dB reading and keep it for reference. If there is a single fault on the cable, it will be approximately the same dB value as the reference reading.

NOTE. To establish how often to take readings on the cable or pipe, move away from the ground stake and take further readings until the arrow has difficulty in locking and the dB reading is low. Measure the distance that the locator is now away from the ground stake. This is the distance that you can safely use between taking readings on the cable or pipe to ensure that you do not miss the fault.

8.3 How to find a fault

Starting from the transmitter, walk along the cable or pipe route pushing the A-Frame spikes into the ground with the green spike pointing away from the transmitter. Where there are no faults the dB reading will be low and the direction arrow may flicker forward and back.

NOTE: Flickering arrows may also indicate that you may be too far away from the fault or ground stake (or both) for the locator to lock on.

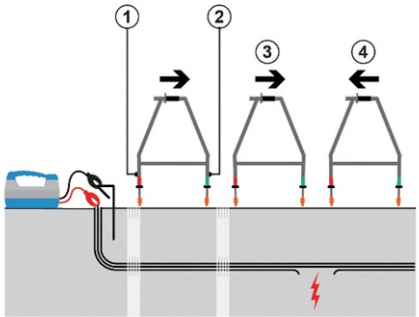

Figure 8.1: Cable sheath fault-finding

If you are trying to locate high resistance faults or there is a long distance between faults, carry on with the survey and the locator will lock on when you get closer to the fault.

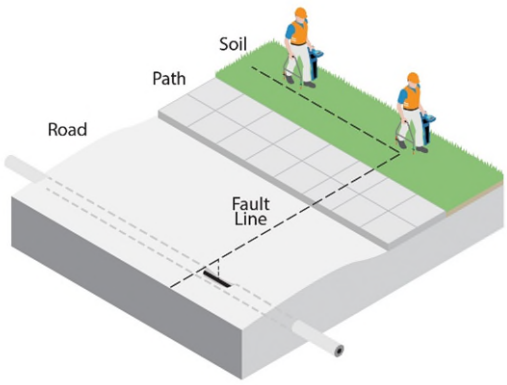

Figure 8.2: Locating faults with the locator and A-frame

Take readings at the survey intervals determined by the reference reading. To locate the cable or pipe while using the fault find signal during a Fault-Find survey, press the key once and the locator will switch to Peak locate mode. To use alternative antenna modes, press the key to step through available antenna modes. To get back to fault find mode step through all available antenna modes until the locator goes back to fault find mode.

NOTE: While the A-Frame is connected to the locator, depth and current measurements will not be available. If depth or current measurements are required, remove the A-Frame lead from the locator.

As a fault is approached the Fault-Find direction arrow will lock on to the fault signal, point forward and the dB readings will increase. When the fault is passed the arrow will point back towards the transmitter. Take readings at smaller survey intervals to determine the exact point of the fault.

When the A-frame is directly over the fault the dB reading will drop as shown opposite.

NOTE: The values given are for illustration purposes only and may not be the same as those obtained in other situations.

To pinpoint the fault, turn the A-frame 90° to the cable or pipe and Fault-Find until the exact point is found. Where the arrow direction changes the center line of the A-frame is now directly over the fault.

Mark the ground to show the position of the fault. Find the maximum dB reading in front of the fault by pushing the A-frame into the ground at small intervals. Note the dB reading. If the reading is approximately the same as the reference reading, you can assume that there is only one fault. If the reading is less than the reference reading, keep surveying the cable for other faults.

NOTE: If the cable or pipe runs under a road, use the equipment as normal on the road surface as it can sometimes detect signals when working on blacktop, concrete, or paved surfaces. If necessary, try wetting the road surface. Pouring a very small amount of water around the bottom of the A-frame spikes before each Fault-Find will generally ensure a good ground connection.

NOTE: If the cable or pipe runs under a paved surface, the fault can often be pinpointed by fault finding in the grass / soil adjacent to the paving. Reduce the distance between placing the A-frame spikes in the ground to allow for the increased distance to the actual fault position.

Section 9 - Current Direction (CD)

9.1 Understanding CD

Current Direction recognition is a feature that helps to positively identify a line at points distant from the application of the signal. It is highly desirable, if not essential, for positive identification of long distance lines. These lines can be traced and positively identified through congested areas or when running parallel to other lines.

The CD feature on the RD8200 locators indicate the direction of the current flow on a line. Identity of the target line is established if the locator display indicates that the current is flowing forward and away from the point of application of the transmitter signal.

A signal that has coupled onto adjacent lines finds a return path to the point of the original signal application. This is indicated by the locator arrow pointing back towards the transmitter.

This is in contrast to the forward pointing arrow indicating the target line.

The CD transmitter signal should be directly coupled to the target line with a remote ground connection. Most CD signals are low frequency, making them unsuitable for connection with a normal clamp or induction. These can however be applied with a transmitter CD clamp.

Using Current Direction (CD) to aid line identification

The RD8200 locators, and Tx-10 and Tx-10B transmitters feature several CD frequencies to help you determine the direction of current through a target line.

NOTE: The transmitter and locator must both have the same CD frequency or frequencies installed to enable the feature to be used. If you have more than one CD frequency installed ensure that the transmitter and locator are both set to the same CD frequency. CD frequencies on both the locator and transmitter will be denoted by the icon on the display.

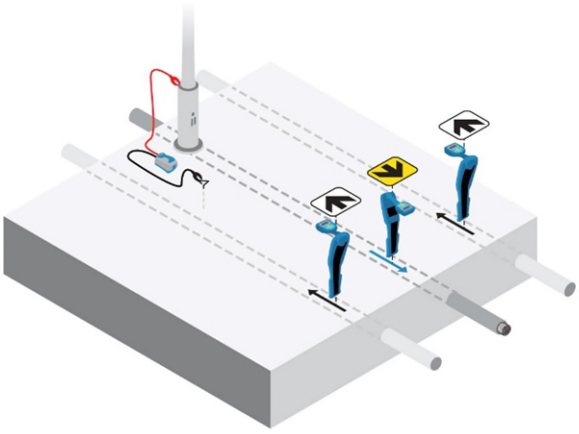

Figure 9.1: Current Direction

To select the CD frequency, proceed as follows:

Transmitter

1 Switch the transmitter off

2 Connect the transmitter to target cable or pipe, either by Direct Connection or by using a CD clamp

3 Switch the transmitter on

4 Press the key until the CD frequency is displayed

CD is a combination of two frequencies, a CD frequency and a locate frequency.

Locator

1 Press the key until the CD frequency is displayed, indicated by the icon.

4 kHz CD

RD8200 models feature Current Direction using a 4 kHz frequency. This frequency is designed to enable you to use CD to identify a target line on higher impedance cables such as telephone cables and CATV.

9.2 CD reset

About CD reset

When you trace a signal on very long target lines, the transmitter signal gradually bleeds into the ground by capacitance. This means the phase angle of the remaining signal gradually changes. A CD Reset can be used to re-establish correct CD operation.

To perform a CD reset, press and hold the ⓕ key

This is referred to as phase-shift and can occur whenever an alternating current signal is flowing in a system of conductors that have a significant capacitance or inductance. The relative phase angle between the two frequencies will alter, but only over extended distances.

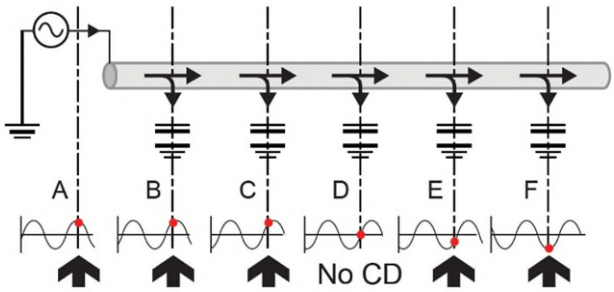

Figure 9.2: CD reset

Figure 9.2 illustrates a buried line with significant capacitance to ground. It illustrates the gradual phase-shift that occurs along the line. The diagram shows a reference point on each waveform. At first, the reference point occurs right on the Peak of a positive half cycle (A). It gradually moves towards the zero crossing point (D) and ends up on the Peak of a negative half cycle (F). The direction has shifted from forwards to backwards. At the intermediate point (D) the current flow cannot be determined. At this point the CD arrows on the RD8200 locator will flash on and off. In the example shown in the illustration, by returning to (C) which is the last point at which a CD reading was achieved, and performing a CD reset, the response at (C) will be equivalent to that of (A).

In most cases the phase angle shift does not occur until many kilometers from the transmitter and in some cases a CD reset may only be required every 20 kilometers (15 miles).

Performing a CD reset

You should perform a CD reset every time you select a CD frequency. CD reset can only be performed when in CD mode.

To perform a CD reset:

While using any CD frequency,

1 Press and hold the key

Alternatively

1 Press the key to enter the menu

2 Scroll to the **CDR** menu using the or keys

3 Press the key to enter the CDR menu

4 Select **YES**

5 Press the ⓕ key to reset CD and exit to the main menu

9.3 CD clamps & stethoscopes

On both the CD / CM clamp and the CD stethoscope there is an arrow that indicates which way the clamp or stethoscope is facing in relation to the transmitter. If the arrow is pointing away from the transmitter when the CD reset is performed the locator display shows **000** and the bar graph reads 100%. If the arrow is pointing towards the transmitter, the locator display shows **111** and there is no bar graph reading.

When using either of these accessories it is important to reset the CD at a known point, near the transmitter, before making any identification measurements

Refer to Section 12 for more information on clamps and stethoscopes.

Section 10 - Survey measurements

RD8200 locator models are capable of recording up to 1000 survey measurement records to internal memory. When a measurement is taken and saved, the RD8200 locator will store the most relevant measurements taken and information, such as:

- Log number
- Current
- Gain
- Depth
- Signal
- Phase
- Frequency
- GPS location (8200G model only or when paired to GPS compatible devices)

These measurements, taken at specific points indicated by you, can be used to report and map all your findings.

If the locator is a GPS model or if paired to an Android device running RD Map™ the locator will append position and time information to the data.

NOTE: The internal GPS module needs to be switched on and connected to the GPS satellite system.

10.1 Saving measurements

To save survey measurements, press the key.

To achieve accurate results, the locator must be kept as still as possible during the saving process.

The locator will always save measurements to internal memory. If Bluetooth is switched on and the Bluetooth survey measurements transmission is activated, the locator will also attempt to send the saved measurement to a paired device running a compatible application. See chapter 10.2 for instructions on how to enable the Bluetooth transmission to a paired device

If your paired device is out of reach, or if its Bluetooth features are disabled, the locator will display an error code. To avoid these errors disable the Bluetooth survey measurements transmission or ensure that your device is within range and correctly paired.

For more information about Bluetooth, refer to Section 11 iLOC™.

⚠ WARNING! When capacity is reached and the next survey measurement is taken, all previous measurements are auto erased. Always ensure all logs are saved via RD Manager Online or RD Maps to prevent losing data.

NOTE: A flashing depth and / or current reading display means that the measurement is poor and should be taken again. Poor readings may be caused by nearby conductors or sources of electromagnetic interference.

10.2 Pairing to Android

On the locator:

1 Press the key to enter the menu

2 Press the or keys to select **SMLOG** menu

3 Press the key to enter the SMLOG menu

4 Scroll up or down to the **PAIR** menu

5 Press the key and the locator will be ready for your compatible device

On your Android device:

1 Navigate to **Settings** > **Bluetooth**

2 Ensure that Bluetooth connectivity is switched on

3 Scan for a new device to add to the list of paired devices

4 Select the **82(G)-xxxx** device

5 If asked for a passkey, enter **1234**

10.3 Survey measurement transmission over Bluetooth

When using the Bluetooth connection on the RD8200, the Bluetooth module is by default kept in **Off** mode. This can help to increase the locator battery life and in some applications reduce potential interference from the Bluetooth module.

The RD8200 locator provides users with the option to set the Bluetooth module to On or Off. In the ON position the Bluetooth module will be permanently ready to send data, which can help to speed up the transfer times compared to that of modules set to STANDBY mode

To change the Bluetooth communication channel:

1 Press the key to enter the menu

2 Press the or keys to select **SMLOG** menu

3 Press the key to enter the SMLOG menu

4 Scroll up or down to the **COM** menu

5 Press the or keys to select **ON** or **OFF**

6 Press the key to confirm your choice

7 Press the ⓕ key to make the selection and return to the main menu

10.4 Erasing measurements

The RD8200 locator allows you to delete all measurements. Erasing the survey measurements will wipe the RD8200 memory and is usually recommended when you begin a new survey and you have saved your previous measurements.

⚠ WARNING! Erasing measurements cannot be undone! Proceed with caution!

To erase all stored measurements:

1 Press the ⏻ key to enter the menu

2 Press the ⇧ or ⇩ keys to select **SMLOG** menu

3 Press the key to enter the SMLOG menu

4 Press the ⇧ or ⇩ keys to select the **DATA** menu

5 Press the key to enter the DATA menu

6 Press the ⇧ or ⇩ keys to select the **DEL**

7 Press the key to enter the DEL menu

8 Press the ⇧ or ⇩ keys to select YES

9 Press the ⓕ key to make the selection and return to the main menu

10.5 Retrieving all survey measurements via Bluetooth

Survey measurements stored in the locator's memory can be transferred wirelessly to a compatible Android device running RD Map for post survey analysis.

To Obtain RD Map

1. On your Android device open Google's Play Store
2. Search for RD Map by Radiodetection Ltd
3. Install the app

Refer to the RD Map operation manual for more info on how to retrieve stored survey measurements.

10.6 Troubleshooting

Successful wireless communication depends on a number of factors including: battery life, electromagnetic interference, device memory and physical obstructions.

Ensure that the RD8200 locator and any other compatible wireless device is sufficiently charged for wireless communication.

Excessive electromagnetic interference can limit the range of wireless communication and / or corrupt data.

The RD8200 locator must be within 10m (30ft) from the compatible paired device to maintain a wireless connection.

Resetting connections

If you experience problems with the RD8200 wireless Bluetooth technology features, Radiodetection recommends resetting the connection and then pairing your device again.

To reset the wireless Bluetooth connections:

1 Press the ⏻ key to enter the menu

2 Scroll to the **SMLOG** menu using the ⇧ or ⇩ keys

3 Press the key to enter the SMLOG menu

4 Scroll up or down to the **RESET** menu

5 Press the key to enter the RESET menu

6 Select **YES** using the ⇧ or ⇩ keys

7 Press the key to enter the iLOC menu

8 Re-pair your devices as described in section 10.2

Bluetooth error codes

If an error occurs when during any Bluetooth communication between the locator and the compatible device, the locator's LCD will display a code to help you resolve the problem. The codes are as follows:

BT Code	Description
BT001	Bluetooth not configured for this unit
BT002	Internal Bluetooth error
BT004	Locator not paired with PCPDA
BT005	Paired but connection attempt failed. Power cycling may be required
BT009	Corrupt response received from paired device
BT010	Transmission to paired device failure

Section 11 - iLOC™

iLOC is a standard feature of all RD8200 locator models. iLOC lets you control the TX-10B Bluetooth transmitter remotely using your locator. With iLOC you can adjust the output frequency, power settings and use SideStep. iLOC commands are sent over a Bluetooth module that can operate at distances of up to 450m / 1400ft in direct line of sight.

To use iLOC, the transmitter and locator must be paired using the procedure described in Section 11.3.

NOTE: The RD8200 locator wireless features may be subject to national and or local regulations. Consult your local authorities for more information.

NOTE: Operating in built up areas and in areas with high electromagnetic interference may reduce iLOC's performance.

⚠ WARNING! Do not attempt any wireless connection in areas where such technology is considered hazardous. This may include: petrochemical facilities, medical facilities or around navigation equipment.

11.1 Switching Bluetooth On

By default, RD8200 locators and Bluetooth enabled transmitters are shipped with the iLOC function disabled.

To switch iLOC On:

1 Press the key to enter the menu

2 Scroll to the **iLOC** menu using the or keys

3 Press the key (locator) or the key (transmitter) to enter the iLOC menu

4 Scroll up or down to the **ON** option

5 Press the key to switch Bluetooth ON and return to the previous menu

11.2 Switching Bluetooth off

You can switch Bluetooth off to prolong battery life or comply with regulations in areas where wireless communications are considered hazardous.

To switch Bluetooth off:

1 Press the key to enter the menu

2 Scroll to the iLOC menu using the or keys

3 Press the key (locator) or the key (transmitter) to enter the iLOC menu

4 Scroll up or down to the OFF option

5 Press the key to switch Bluetooth off and return to the previous menu

11.3 Pairing to an iLOC transmitter

To pair to a transmitter you require an iLOC enabled model such as the Tx-10B.

Before you begin, try to switch off all nearby Bluetooth equipment as they may interfere with the locator and transmitter's pairing process.

On the locator:

1 Press the key to enter the menu

2 Scroll to the **iLOC** menu using the or keys

3 Press the key to enter the iLOC menu

4 Scroll to the **PAIR** option

On the transmitter:

5 Press the key to enter the menu

6 Scroll to the **iLOC** menu using the or keys

7 Press the key to enter the iLOC menu

8 Scroll to the **PAIR** option

Starting the pairing process:

9 Press the key on the transmitter followed by the key on the locator.

NOTE: You should press these keys within a 30 second window otherwise the connection may time out

10 The transmitter and the locator will now attempt to pair

When pairing is in progress, the transmitter and locator will display a flashing Bluetooth icon. Pairing can take up to a minute. If the pairing process is successful, the transmitter will display the icon and the locator will display a persistent Bluetooth icon for the duration of the connection.

If pairing fails, ensure that any nearby Bluetooth devices are switched off or invisible then repeat the process.

Once the locator and transmitter have successfully paired the transmitter should be power cycled to complete the

process. You can then use iLOC to remotely change the transmitter's output frequency and power levels from the locator. See Section 13 for further details.

11.4 Troubleshooting

Successful wireless communication depends on a number of factors including: battery life, electromagnetic interference, device memory and physical obstructions.

Ensure that the RD8200 locator, transmitter and any other wireless device is sufficiently charged for wireless communication.

Excessive electromagnetic interference can limit the range of wireless communication and / or corrupt data.

Although iLOC can successfully function at distances up to 450m (1400ft) in direct line of sight, your wireless device and the RD8200 locator must be within 10m (30ft) to maintain a wireless connection.

Resetting connections

If you experience problems with the RD8200 wireless iLOC technology features, Radiodetection recommends resetting the connection and then pairing your device again.

To reset the wireless iLOC connections:

1 Press the key to enter the menu

2 Scroll to the **iLOC** menu using the or keys

3 Press the key on the locator and the on the transmitter to enter the iLOC menu

4 Scroll up or down to the **RESET** menu

5 Press the key on the locator and the on the transmitter to enter the RESET menu

6 Select **YES** using the or keys

7 Press the key to confirm your choice

8 Re-pair your devices as described in section 11.3

Bluetooth error codes

If an error occurs when attempting to perform any Bluetooth command using the locator to the transmitter, the LCD will display a code to help you resolve the problem on the locator.

The codes are as follows:

BT Code	Description
BT001	Bluetooth not configured for this unit
BT002	Internal Bluetooth error
BT003	Locator not paired with transmitter
BT005	Paired but connection attempt failed. Power cycling may be required
BT006	Corrupt response received from transmitter
BT007	Indeterminate response received from transmitter
BT008	No response received from transmitter
TX???	Transmitter unable to change to the requested frequency – check that the transmitter model is set correctly

Table 11.1: Bluetooth error codes

11.5 Using iLOC

Locator and transmitter need to be switched ON and paired to use iLOC.

For optimum performance:

- Minimize obstructions in line of sight
- Raise the transmitter off the ground by 30-60cm (1-2ft)
- Point the screen of the locator towards the transmitter

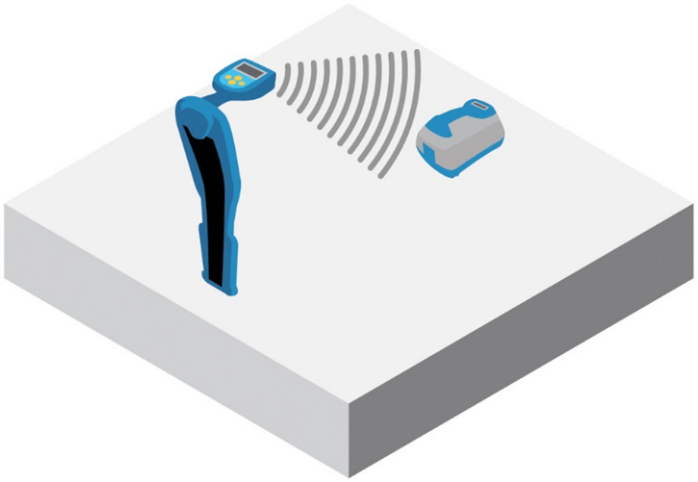

Figure 11.1 Using iLOC

NOTE: If any iLOC commands fail, move closer to the transmitter and repeat the process.

11.6 iLOC functions

Changing frequencies

Once the transmitter and the locator are paired, you can change the transmitter's output frequency remotely using the locator:

1 On the locator, select the frequency you want by pressing the key until the frequency is displayed on screen.

2 iLOC commands are sent using the key, press it to send the new frequency to the transmitter.

3 The locator's LCD will display **SEND** momentarily and then **OK** if the transfer is successful.

4 If the transfer is unsuccessful, the LCD will display an error code. Refer to table 11.1 for a list of codes and their meaning.

If the process fails, you may be out of range or there may be an error in the connection. Move closer to the transmitter and retry the procedure. If the connection continues to fail, return to the transmitter and reset the connection using the procedure described in Section 11.

NOTE: If you are locating a sonde frequency, an iLOC command to a paired transmitter will automatically set that transmitter to standby to eliminate interference from the transmitter.

Adjusting power

iLOC lets you adjust the transmitter's power output remotely; you can also put the transmitter into standby mode and then wake it remotely.

To adjust the power output:

1 Transmitter power options are located in the **TXOUT** menu on the locator. Press and hold the Tx key to display the TXOUT menu

2 Press the key to enter the TXOUT menu

3 Scroll up or down through the power output options; these are:

- **STDBY**: Transmitter standby mode, the connection is still active but the output is disabled
- **LOW**: Low power output
- **MED**: Medium power output
- **HIGH**: High power output
- **BOOST**: Temporarily boosts transmitter power output to its maximum level

4 Once you have selected the mode you want, press the f key to confirm

5 Press and hold the Tx key to select the new setting and exit the menu

6 Press the Tx key once to send the settings to the transmitter

NOTE: Once you have stored the transmitter power setting in the locator, the locator will change the transmitter to that setting when you change the frequency with the locator.

Sleep / wake the transmitter

To help you prolong battery life you can put the transmitter in standby mode (sleep), and reactivate it again, using the locator.

To put the transmitter into standby mode, set the TXOUT menu on the locator to **STDBY** using the "Changing transmitter power output" procedure described above.

This will disable the transmitter output.

To re-activate the transmitter output, select any power mode from LOW to BOOST using the same procedure.

If the process fails, you may be out of range or there may be an error in the connection. Move closer to the transmitter and retry the procedure. If the connection continues to fail, return to the transmitter and reset the

11.7 SideStep™

If you are using a preferred locate frequency and having difficulty locating the utility, interference could be affecting the locate signal. SideStep allows the locator to change the locate frequency by several Hertz.

Section 12 - Using accessories

12.1 About accessories

Both the transmitter and locator are compatible with a wide range of accessories.

When an accessory is connected, the locator or transmitter will recognize it and will enable the mode appropriate to the accessory. For example, attaching an A-Frame to the RD8200 locator will automatically switch the locator to fault-find mode and limit the number of available frequencies to those that are compatible with the A-Frame. The LCD will also display an icon of the accessory and will remove any nonessential icons from the screen.

Radiodetection supply an accessory sheet with pictures and details of all applicable accessories which is available on www.radiodetection.com

For a full list of supported accessories that are available for purchase, refer to the appendix

12.2 Headphones

Radiodetection supplies an optional headphone set for the RD8200 locator. The headphones feature an adjustable headband to ensure a tight fit when used in the field. The accessory headphones also feature volume adjustment for both left and right speakers.

Connect the 3.5mm headphone jack into the locator's headphone socket, which is located next to the accessory panel.

⚠ WARNING! Before wearing headphones, lower the locator's volume levels to help prevent damage to your hearing.

⚠WARNING! Wearing headphones may impede your awareness to dangers in the field such as moving traffic or other heavy machinery. Exercise caution!

12.3 Locator clamps

A locator clamp is used to positively locate and identify a cable when several cables are running close together.

A target cable can be identified in a chamber, on a tray or other access point by fitting a clamp to the locator and examining each cable in turn. Signal strength response shown on the locator display should be noted for each cable.

When to use clamps

Clamps can be used where:

- Several cables or pipes run in close proximity to each other.
- A cable or pipe is accessible at an inspection hole or manhole.

NOTE: The standard clamp cannot be used with CD. A special CM / CD clamp is available to clamp the lower frequency CD signals.

Connecting a clamp

1 Put the clamp connector into the accessory socket on the front of the RD8200 locator.

2 Place the clamp around the pipe or cable and switch the locator on.

3 Set the frequency to the same as that on the transmitter.

4 Put the clamp around each cable in turn and note the bar graph response. Compare the strength of response from each cable. The cable with a substantially stronger response than the others will be the cable to which the transmitter signal has been applied.

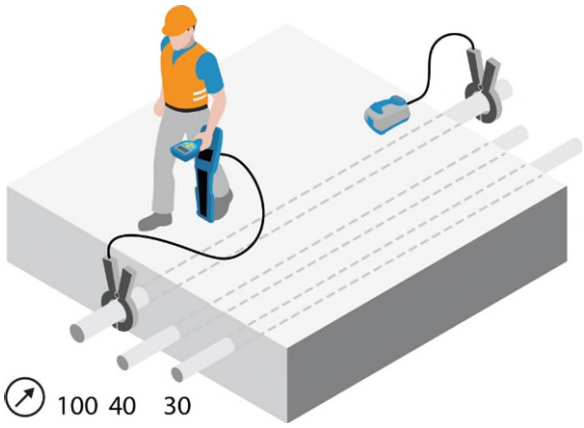

Figure 12.1: Connecting clamps

To ensure that the target cable has been correctly identified, reverse the positions of the transmitter and locator and check that the strongest response is still received from the target cable by the locator in its new position.

Locator clamp range

Standard clamps

The clamp plugs into the locator accessory socket and is used for cable identification at points where the cable can be accessed. The standard clamps are suitable for cables up to 130mm (5¼") diameter.

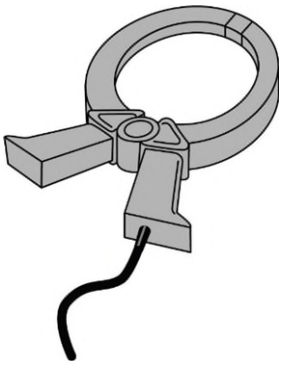

Figure 12.2: Standard Clamp

Small clamp

The small clamp performs the same function as the standard clamp but is useful in cramped situations where there is insufficient access for the standard clamp.

The small clamp is suitable for cables up to 50mm (2”) diameter.

Current Direction™ (CD) and Current Measurement (CM) clamp

The CD / CM clamp plugs into the accessory socket of the locator and enables CD and current measurements to be made on individual cables.

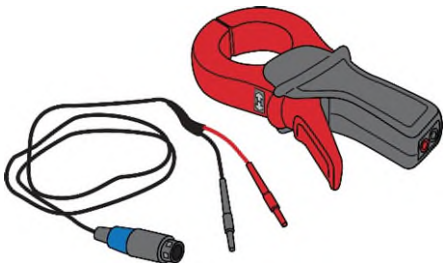

Figure 12.3: CD / CM Clamp

This accessory is used to identify a particular cable that is bunched with several other cables or in close proximity to other cables. The combination of direction current and current magnitude is extremely useful for identification purposes.

12.4 Transmitter clamps

The transmitter clamp fits around a pipe or cable and safely applies a signal to a live insulated cable without interrupting or disconnecting the supply. The clamp applies a very discriminating signal to a target line with reduced coupling to other lines. A clamp can sometimes be a more effective method of applying the signal than Direct Connection.

The target line will carry the strongest signal. The other lines will carry the weaker return signal. If the system comprises only two conductors, they may carry equal signals.

⚠ WARNING! Do not clamp around uninsulated live conductors

⚠ WARNING! Before applying or removing the clamp around a power cable, ensure that the clamp is connected to the transmitter at all times.

The clamp may buzz or vibrate if it is placed around a power cable that has significant net current flow. This is normal and does not harm the equipment.

Connecting the clamp

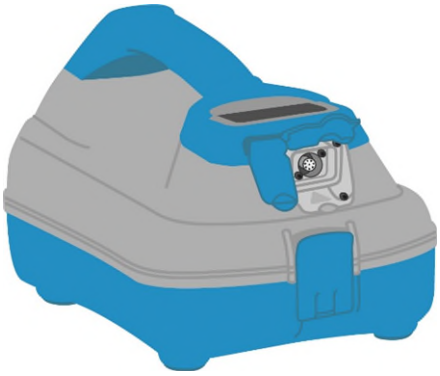

Figure 12.4 Transmitter output socket

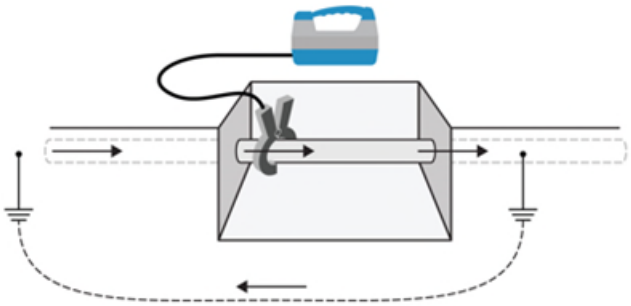

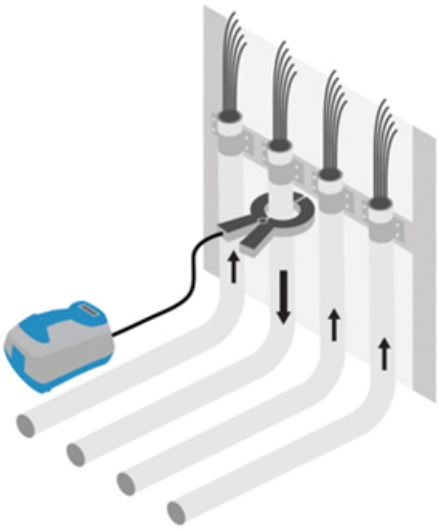

7 Plug the clamp into the transmitter output socket.

Figures 12.5. – 12.6.: Connecting transmitter clamps

8 Put the clamp around the pipe or cable and ensure that the jaws are closed. Switch the transmitter on.

The display will show the Clamp connected icon

Figure 12.7 Clamp connected icon

The line should be grounded (earthed) on each side of the clamp for the signal to transfer to the line. Ground the line if necessary. An insulated cable may be traced even if it has no actual ground connection, providing a reasonable length is buried either side of the clamp to provide capacitive coupling to ground (earth).

NOTE: It is not necessary to make a ground connection from the transmitter when using the clamp.

Transmitter clamp range

Although transmitter and locator clamps look the same, they have different internal windings. To prevent the wrong clamp being connected, transmitters and locator clamps have plugs of a different orientation.

Standard signal clamps

The standard clamps apply the transmitter signal very selectively and effectively to a target cable up to 130mm (5¼") in diameter using frequencies from 8kHz to 200kHz

The standard and small clamps have a double spring action for positive toroidal contact.

Small signal clamp

The small signal clamp is useful for applying signals from 8kHz to 200kHz to a target cable in a pedestal or other place with limited space. The clamp is suitable for cables up to 50mm diameter.

Current Direction (CD) clamp

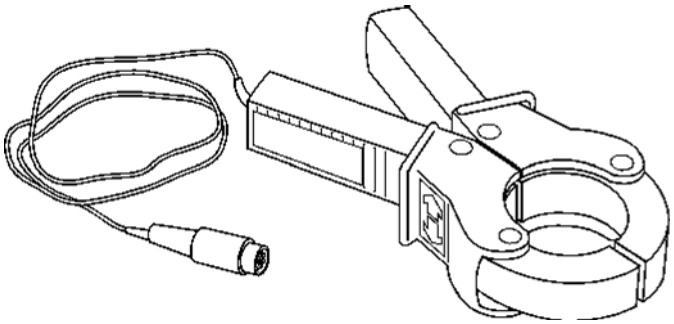

Figure 12.8: CD clamp

The CD clamp plugged into the accessory socket of the transmitter enables CD signals to be applied to individual cables.

⚠ WARNING!. The transmitter must only be connected to live services using the appropriate accessory such as a plug connector or live cable connector.

12.5 Transmitter external power supply

The external Mains or vehicle power supplies provides an alternative and convenient method of powering the transmitter.

⚠ WARNING!. The mains power supply rating are: 100-240VAC, 1.3A. Always use an adequately rated detachable mains lead.

⚠ WARNING!. The mains power supply is not IP rated and should not be used in wet locations

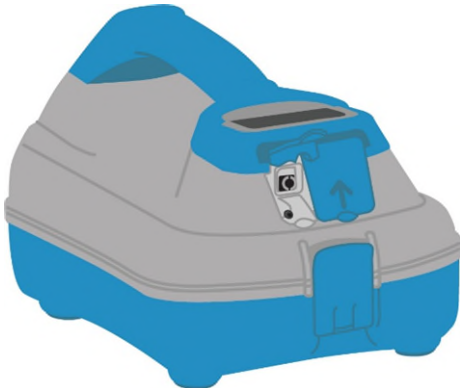

Figure 12.9: Transmitter DC Input

To use the mains or vehicle power supply units connect them to the DC input socket in the transmitter before connecting them to the mains or vehicle supply socket.

⚠ WARNING! The mains PSU supply cable is the disconnecting method for isolating the unit from the main supply.

⚠ WARNING! The battery compartment lid is the disconnecting method for isolating the unit from the battery supply.

⚠ WARNING! Do not position the equipment so it is difficult to disconnect the unit from each supply.

⚠ WARNING! Protection will be impaired if used in a manner not specified.

12.6 Sondes

Sonde overview

A sonde is a self-contained battery operated transmitter used for tracing the paths of pipes, ducts, sewers and drains and in the precise location of blockages or collapses. The sonde can be fitted to a flexible rod for insertion or pushing through pipes etc. and the smaller diameter sondes can be used in conjunction with jetting machines and blown through the duct. A suitable Radiodetection locator can then be used to locate the sonde

Choosing a suitable sonde

Radiodetection offers a wide range of sonde to suit most applications: From the ¼" / 6 mm diameter S6 33kHz microsonde which, with a range of 6.6" / 2m, targets fiber-optic micro ducting or other small non-conductive pipes, to the 33kHz Super Sonde, which with a depth range of 50 feet / 15m targets deep sewer pipes.

Consult the precision locate accessory range brochure or web page on www.radiodetection.com for a full list of all available sondes and their technical specifications.

Check that the sonde has sufficient range for the application and is dimensionally small enough and sufficiently robust for the application. Ensure that the frequency of the sonde corresponds with the locator frequency; the locator will not locate the sonde unless the frequencies are the same. Sondes are marked with their transmitting frequency. Ensure that the means of propelling the sonde is available together with the correct fittings and couplings.

Preparation

Insert a new battery into the sonde. A new battery or a freshly recharged battery should be used at the beginning of each day and preferably at the start of each new job.

Before inserting the sonde, check that the sonde and locator are at the same frequency and working correctly. To do this, place the sonde on the ground at a distance from the locator that is equal to the rated depth of the sonde. Point the locator at the sonde with the antenna in line with the sonde (the opposite of using the locator to locate a line) and check that the bargraph reading exceeds 50% at maximum sensitivity.

Propelling a sonde

Sondes have a thread at one end for connecting to drain rods, or to other devices for inserting and propelling the sonde along a drain or duct. Sondes may be floated along drains at the end of a tether and floats are available for fitting to the sewer sonde and super sonde. Sondes can be strapped to high-pressure water jets or similar devices used for cleaning, maintaining and inspecting drains. Sondes used in underground drilling and boring operations are normally housed in the boring or drill head behind the boring or drill bit.

Locating and tracing a sonde

Insert the sonde in the drain or duct access and locate it while it is still just in view at the drain or duct entrance. Hold the locator vertical directly over the sonde with the antenna in line with the sonde. Adjust the locator sensitivity so the bar graph reads between 60% and 80%.

The sonde radiates a Peak field from the center of its axis with a ghost signal at each end of the Peak. Move the locator a little way behind and then in front of the axis of the sonde to detect the ghost signals. Finding the two ghost signals positively confirms the locate. Reduce the locator sensitivity to lose the ghost signals but still indicate a clear Peak response directly over the sonde. Locator sensitivity is now set for tracing the duct or drain unless the distance between sonde and locator changes.

Propel the sonde three paces along the drain or duct and stop. Place the locator over the supposed position of the sonde. Do not adjust the sensitivity level.

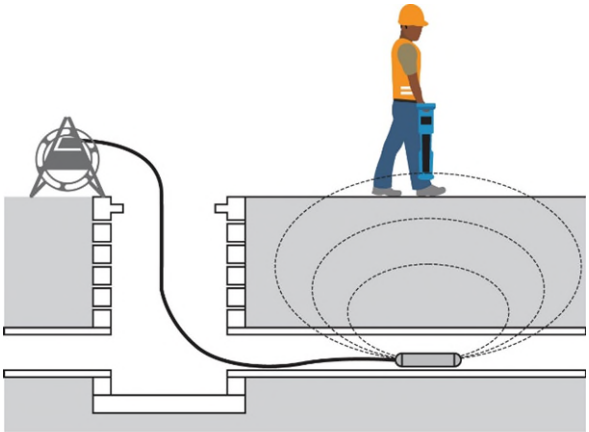

Figure 12.10 Sonde deployment

To locate a sonde:

1 Move the locator backwards and forwards and stop when the bar graph indicates a Peak. You can use the LCD compass to orient the blade of the locator with the direction of the sonde.

2 Rotate the locator as if the blade is a pivot. Stop when the bar graph indicates a Peak.

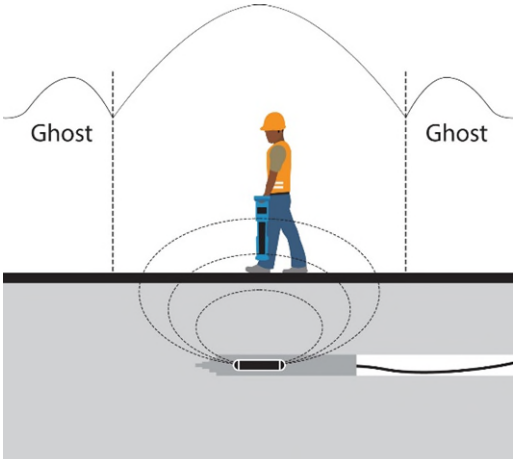

Figure 12.11 Locating a sonde

3 Move the locator from side to side until the bar graph indicates a Peak.

4 Repeat 1, 2 and 3 with the antenna vertical and resting on or just above the ground. The locator should then be directly above the sonde with the antenna in line with it. Mark the position of the sonde and its direction.

5 Propel the sonde a further 1 or 2 meters, pinpoint, and mark the position. Repeat this pinpoint procedure at similar intervals along the line of the drain or duct until the survey is completed.

Checking sonde depth

The RD8200 locator will automatically display the depth of a located sonde providing the locator is correctly oriented and positioned above the sonde. Using the LCD compass as a guide, rotate the locator until the compass indicates the sonde is in East / West position.

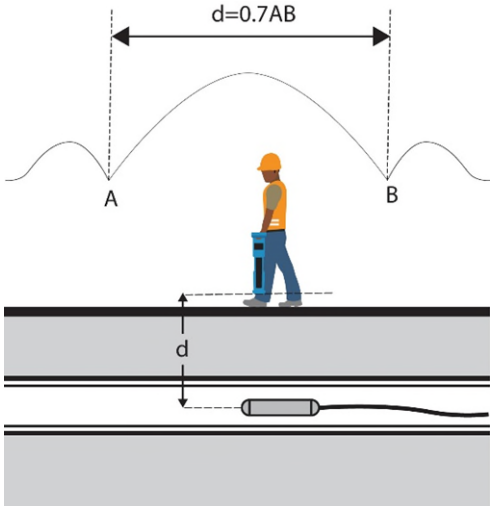

Figure 12.12: Calculating sonde depth

Calculation method

Pinpoint the sonde. Move the locator in front of the sonde and still with the antenna in line with it, increase sensitivity to find the Peak of the ghost signal. Move the locator to behind the sonde ensuring that the locator blade is always in line with the sonde. Find the null positions A and B (See Figure 8.10). Measure the distance between them and multiply by 0.7 to give an approximate depth measurement.

Flexitrace

The Flexitrace is a traceable plastic covered fiberglass rod incorporating wire conductors and is used for locating small diameter, non-metallic pipes to a depth of 3 meters. The Flexitrace can be inserted into a pipe or duct as small as 9 mm / 3/8" internal diameter, and with a minimum bend radius of 250mm. Batteries are not required, as the FlexiTrace is powered by any Radiodetection transmitter.

The FlexiTrace has a maximum power rating of 1W. When using the FlexiTrace with a Radiodetection Tx-5 or Tx-10 transmitter the output limit must be set to 1W in the MAX P menu and the output voltage limit set to LOW in the MAX V menu.

⚠ WARNING! Failure to follow the Tx-5 or Tx-10 instructions above may result in the tip of the FlexiTrace becoming too hot to touch, resulting in risk of personal injury and damage to the equipment.

The FlexiTrace can be used in two modes: Sonde mode or Line mode. In sonde mode only the tip of the FlexiTrace is energized whilst in line mode its whole length is energized.

To use as a sonde, connect both transmitter leads to the FlexiTrace stud terminals. As the FlexiTrace terminals are not color coded it does not matter to which terminals the leads are connected. To use the FlexiTrace in line mode, connect the red transmitter lead to one of the FlexiTrace terminals and connect the black transmitter lead to a suitable ground connection.

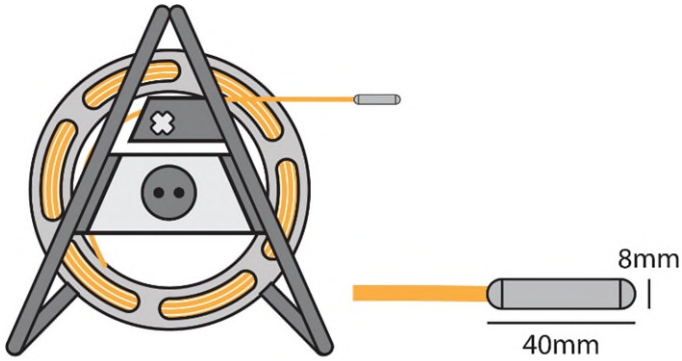

Figure 12.13: FlexiTrace

12.7 Stethoscopes

When to use a stethoscope

At times, it may not be possible to put a clamp around a cable because of congestion or because of inaccessibility. A stethoscope antenna should be used in place of a clamp to identify the target cable(s).

How to use a stethoscope

Plug the stethoscope into the locator accessory socket. Press the concave head against each cable in turn to detect a maximum signal.

Stethoscope range

Large stethoscope antenna

The large stethoscope antenna, which plugs into the locator accessory socket, is used for cable identification in situations where the cable is exposed. It is particularly useful for identifying heavy cables lying in a tray where it is not possible to fit a clamp. The concave detector head on the end of the insulated, flexible gooseneck is placed firmly against the cable to be identified. If there are a number of cables, the stethoscope antenna will give the strongest response from the cable to which the transmitter signal has been applied.

Small stethoscope antenna

The small stethoscope antenna has a 25mm (2") concave head at the end of a 2m (6½ ft) lead. The small stethoscope can be screwed into an extension rod or used at the end of several extension rods joined together for identifying inaccessible small cables.

Miniature hi-gain stethoscope

The miniature stethoscope is similar to the small stethoscope but has no handle or facility for extension rods.

The miniature stethoscope can also be used as a miniature antenna for locations where the bulk of the locator makes it

inconvenient for use, such as locating pipes or cables in walls.

CD stethoscope

In restricted areas, the CD stethoscope can be used to obtain current direction but not current measurement.

12.8 Submersible antenna

When to use a submersible antenna

Tracing buried pipes and cables across waterways and estuaries are frequent and critical locating applications. Less frequent but equally important is tracing and locating lines between the mainland and offshore islands. When locating pipes and cables the locator sensing antennas should be as close as possible to the target line so it is not practical to locate lines buried under a river or seabed from the surface. In most cases, it is necessary to measure the depth of cover to ensure the line is protected from dragging anchors or other underwater hazards.

The submersible, double depth antenna is suitable for use under water for tracing pipes or cables. There is a weight at the bottom of the antenna for stability and the unit has been pressure tested to IP68 to a depth of 100m (300ft).

The antenna is supplied with 10m of submersible marine umbilical cable as standard, but lengths of up to 100m can be supplied. The extra length enables the antenna to be carried by a diver on a riverbed or seabed while the locator is used in a surface vessel. It is crucial to have effective communication between the operator with the locator and the diver with the antenna.

Alternatively, the antenna can be fastened to the end of a non-metallic boom from a barge and lowered to the riverbed or seabed.

How to use a submersible antenna

Apply the transmitter signal to the target line at an access point on the shore. The submersible antenna line for tracing the line underwater is plugged into the accessory socket of the locator. The locator is used onboard a boat, which should by positioned directly over the line. The transmitting signal should be applied by Direct Connection with the strongest possible signal and at the frequency that the submersible antenna is calibrated to. Make a ground connection about 50m (160ft) from the transmitter. Test the quality of signal on the line before locating on the water.

NOTE: The submersible antenna is calibrated to work at one frequency.

Tips for using a submersible antenna:

The user in the boat should be a specialist or have considerable experience using a locator so that they can give concise instructions to the diver.

It is prudent for the pair to practice working together on dry land before attempting to locate underwater. Using the antenna, the diver should locate and trace a known line blindfolded receiving directions from the user with the locator out of sight of the line and the diver.

Because of rapid signal loss and a combination of large surface area and very conductive soil there may be problems applying a suitable signal for tracing a large diameter pipe. It may be necessary to use a high power, low frequency tracing signal.

It is necessary to define a method of recording target line position and depth before starting work in the boat or on the seabed.

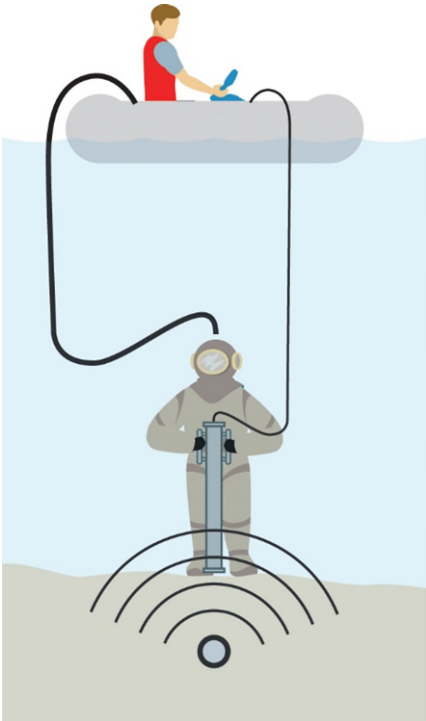

Figure 12.14: Using a submersible antenna

⚠ WARNING! Only properly licensed and experienced divers should attempt to use the submersible antenna.

12.9 Phone/Tablet mount

When using a mobile device running a compatible application, such as RD Map for Android, you can use the Phone or Tablet mount to conveniently hold your device next to the locator and have immediate visual feedback on the survey measurement points you are marking.

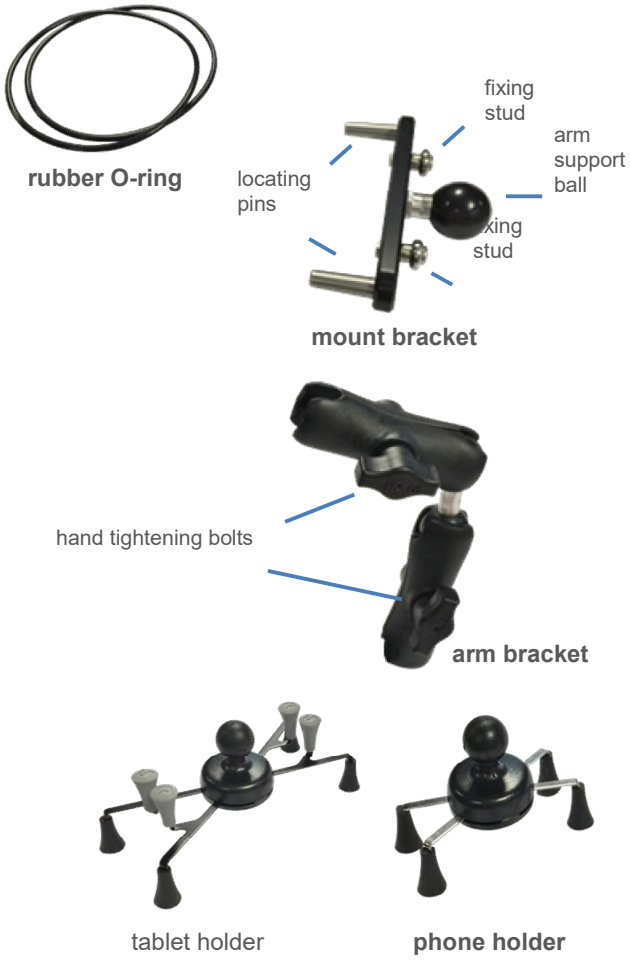

Figure 12.13: Phone/tablet mount kit

To use the mobile device mount:

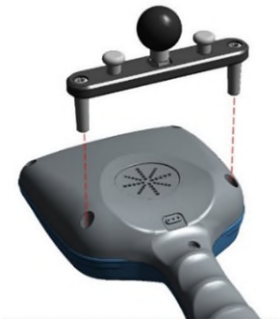

Figure 12.14: Bracket positioning

1 Insert the mount bracket locating pins in the mounting holes at the back of the locator screen

2 Secure the rubber O-ring around either of the 2 fixing studs and loop it around the locator handle

Figure 12.15: Bracket secured

3 Stretch the other end of the rubber O-ring over the remaining fixing stud as for Figure 12.15

4 Use the hand tightening bolts to loosen up the arm brackets and to attach it over the bracket's arm support ball.

5 Add the phone or tablet holder

6 Tighten the hand tightening bolts to secure the mount

7 Position the phone or tablet to the front of the locator as shown in Figure 12.16

Figure 12.16: Phone/tablet correct position

⚠ WARNING: Mobile phones or tablets may interfere with the locator's performance if positioned not in front of the locator, see picture 12.16

Some mobile phone or tablets may affect the locator's performance, even if used in the correct position. This may be obvious in situation where the locator is trying to detect a very small signal and it manifests itself by an unstable signal shown on the bargraph and/or depth or current measurement.

If in doubt remove the mobile phone or tablet to verify if these are affecting the behavior of the locator.

No cables, such as power leads or headphones, must be connected to the phone or tablet when used with the mount kit.

Section 13 - Appendices

13.1 Care and maintenance

The RD8200 locator and transmitter are robust, durable and weatherproof. However, you can extend your equipment's life by following these care and maintenance guidelines.

General

Store the equipment in a clean and dry environment.

Ensure all terminals and connection sockets are clean, free of debris and corrosion and are undamaged.

Do not use this equipment when damaged or faulty.

Batteries and power supply

Use good quality Alkaline or NiMH batteries only.

When using an AC adapter, use only Radiodetection approved adapters.

Only use Radiodetection approved Li-Ion battery packs.

Cleaning

⚠ WARNING! Do not attempt to clean this equipment when it is powered or connected to any power source, including batteries, adapters and live cables.

Ensure the equipment is clean and dry whenever possible.

Clean with a soft, moistened cloth.

If using this equipment in foul water systems or other areas where biological hazards may be present, use an appropriate disinfectant.

Do not use abrasive materials or chemicals as they may damage the casing, including the reflective labels.

Do not use high pressure hoses.

Disassembly

Do not attempt to disassemble this equipment under any circumstances. The locator and transmitter contain no user serviceable parts.

Disassembly may damage the equipment and or reduce its performance and may void the manufacturer's warranty.

Service and maintenance

For over 40 years, Radiodetection has designed and manufactured Cable and pipe locators. Our reputation for quality and reliability is unrivalled in the industry. When used and maintained correctly, customers enjoy many years of uninterrupted use. We recognise that product selection is just the start of the journey. Quality of service and aftercare are paramount to ensure the life of the equipment. With that in mind, Radiodetection offers a range of comprehensive after-sales services to give users the confidence that your cable and pipe locators will live to their full potential.

To keep our products in good working order, we would encourage users to evaluate their own needs and operational user cases to create a maintenance, service and repair regimen that is right for them. Many factors can influence the creation of that regimen. Here are just some factors that should be considered that might have a bearing on what is the right maintenance regimen for you. Frequency of use, type of service, environmental conditions and creating a common maintenance program across other equipment types will all come into play. We would encourage users to ensure they factor in the full extent of the locator kit. Transmitter, receivers, chargers, leads and Li-Ion batteries as examples all need to be factored both separately and collectively.

Users may want to consider a multi-factored regimen that covers daily, weekly, monthly and annual activities. This could start with visual inspections especially power cables, gaskets and batteries for signs of wear and tear. Radiodetection also offers two services that customers may want to consider.

Remote digital calibration

eCert remote calibration testing provides fast and convenient calibration testing of Radiodetection's locators without the need to return them to a service centre, saving time and expense for operators.

Using an internet connection to Radiodetection, eCert tests the locating circuitry within a connected locator, applying test signals to key components to confirm that the unit remains within calibration and suitable for use.

Service and repair services

Radiodetection also offers a global network of registered service centres that provide a range of service options to inspect, repair, service and recalibrate you pipe and cable locators.

Regularly check your locator for correct operation using eCert (see section 13.6) and the on-board Self-Test.

NOTE: Service by non-approved service centers or operators may void the manufacturer's warranty.

Radiodetection products, including this guide, are under continuous development and are subject to change without notice. Go to www.radiodetection.com or contact your local Radiodetection representative for the latest information regarding the RD8200 locator or any Radiodetection product.

13.2 Enhanced Self-Test

RD8200 locators incorporate an Enhanced Self-Test feature. In addition to the typical checks for display and power functions, the RD8200 applies test signals to its locating circuitry during a Self-Test to check accuracy and performance.

We recommend that a self-test is run at least weekly, or before each use.

Running a Self-Test

As the Self-Test tests the integrity of the locate circuity, it is important that it is carried out away from large metallic object such as vehicles, or strong electrical signals. To run a Self-Test:

1 Press the key to enter the menu

2 Scroll to the **INFO** menu using the or keys

3 Press the key to enter the INFO menu

4 Select TEST using the or keys.

5 Press the key to select **YES**

6 Press the key to begin the Self Test

7 Once the Self-Test is completed, the result (PASS or FAIL) will be displayed.

8. Restart the locator using the key

13.3 RD Manager™ Online

RD Manager Online is the RD8200 Locator PC companion and allows you to manage and customize your locator. It also allows software upgrades to both the locator and transmitter.

You can use RD Manager Online to setup your locator by performing a number of maintenance tasks, such as setting date and time, activating and de-activating active frequencies, setting up custom frequencies, or setting-up functions like CALSafe or Strike*Alert*.

RD Manager Online is also used to retrieve and analyze surveys data and internal logged data (logging and GPS models only).

RD Manager Online is compatible PCs running with Microsoft Windows 10 64 bit.

For more information about RD Manager Online refer to the RD Manager operation manual.

To Obtain RD Manager Online:

1 Go to www.radiodetection.com

2 Follow the instructions

13.4 Warranty and extended warranty

RD8200 locators and transmitters are covered by a 1-year warranty as standard.

Customers can extend the warranty period to a total of 3 years by registering their products (locators and transmitters) within 3 months from purchase.

To register your product:

Visit https://portal.radiodetection.com/ to create your portal account* and use the Product page to register your locator or transmitter.

Visit https://support.radiodetection.com/hc/en-gb for instructions on how to create a portal account or register your product.

* A valid email address and mobile number are required.

Or

by using the **RD Manager Online** PC software.

To Obtain RD Manager Online:

Visit: https://www.radiodetection/rd-manager-online

From time to time Radiodetection may release new software to improve the performance or add new functionalities to his products. By registering user will benefit from subscribing to e-mail alerts advising about any new software and special offers related to its product range.

Users will be able to opt out at any moment from receiving software and technical notifications or just from receiving marketing material.

13.5 Upgrading software

From time to time, Radiodetection may release software upgrades to enhance features and improve performance of the RD8200 locator or transmitter.

Software upgrades are free of charge.

You can check if your products are up-to-date or upgrade them by using the RD Manager Online software upgrade screen. Refer to the RD Manager Online operation manual for further information.

E-mail alerts and notification of new software releases are sent to all registered users.

NOTE: To upgrade your software you need to have created an account using RD Manager Online and have a live internet connection. An optional Radiodetection supplied power source may be required to update your transmitter software.

13.6 eCert

The RD8200 locator should be regularly checked to ensure its correct operation.

eCert provides a thorough test of the RD8200's locating circuitry and marker transceiver, and supplies a Radiodetection Calibration Certificate when a positive test result is obtained.

To run eCert, the locator should be connected to an internet-enabled PC, on which the RD Manager Online software is installed. Additional eCert credits may be required and purchased.

Refer to the RD Manager Online operation manual for further details.

NOTE: eCert is not presently available for transmitters.

13.7 Time and date error messages

RD8200G usage logging and GPS model features an internal clock which is used to time and date survey measurements, the 1/second internal logging and for the CALSafe feature.

Every time the locator is switched on, it performs a check to verify its correct operation.

In the unlikely event of an issue with this clock the system will emit a warning audio tone and display the word **ERROR**, followed by a 3-digit error code.

Make a note of this code and contact your nearest service center or Radiodetection representative.

13.8 TX5 and TX10 locator models, operation mode and active frequencies

Active Frequencies	Operation Mode	PDL	PDLU	PXL	TL	PL	DL	SL	SLQ	H2O+	RD4K	72	82
512Hz	DC CD Clamp	•	•	•	•	•	•		•			•	•
570Hz	DC CD Clamp	•											•
577Hz	DC CD Clamp	•		•									•
640Hz	DC CD Clamp	•		•	•	•	•					•	•
760Hz	DC CD Clamp	•											•
870Hz	DC CD Clamp	•		•									•
920Hz	DC CD Clamp	•											•
940Hz	DC Induction CD Clamp	•	•	•									•
4kHz (4096Hz)	DC Induction Clamp CD Clamp LPC/LCC	•	•	•							•		•
8kHz (8192Hz)	DC Induction Clamp LPC/LCC	•	•	•	•	•	•	•	•	•	•	•	•
9.8kHz (9820Hz)	DC Induction Clamp CD Clamp LPC/LCC	•								•			•
33kHz (32,768Hz)	DC Induction Clamp LPC/LCC	•	•	•	•	•	•	•	•	•	•	•	•
65kHz (65,536Hz)	DC Induction Clamp CD Clamp LPC/LCC	•		•	•	•	•	•	•	•	•	•	•
83kHz (83,000Hz)	DC Induction Clamp CD Clamp LPC/LCC										•		•
83kHz (83,077Hz)	DC Induction Clamp CD Clamp LPC/LCC	•		•				•	•	•		•	•
131kHz (131,072Hz)	DC Induction Clamp CD Clamp LPC/LCC	•		•	•	•	•	•	•	•		•	•
200kHz	DC Induction Clamp CD Clamp LPC/LCC	•		•	•					•		•	•

(*) DC = Direct Connection, LPC = Live Plug Connector, LCC= Live Plug Connector

13.9 TX5 Fault Find locator models

CD pairs	PDL	TL	PL	72	82
8KFF	•	•	•	•	•

13.10 TX 10 Fault Find locator models

CD pairs	PDL	PDLU	TL	PL	H2O+	72	82
8KFF	•		•	•		•	•
CDFF (See Current Direction)	•	•			•		•

13.11 TX 10 locator models Current Direction (CD) frequencies

CD pairs	PDL	PDLU	H2O+	82
256Hz / 512Hz	•			•
285Hz / 570Hz	•			•
320Hz / 640Hz	•			•
380Hz / 760Hz	•	•		•
460Hz / 920Hz	•			•
4096 / 8192Hz 'MFCD'	•	•	•	•

© 2023 Radiodetection Ltd

13.12 TX10-B iLOC locator model, operation mode and active frequencies

Active Frequencies	Operation Mode	PTL	PTLM	PDL	PDLU	PXL	TL	PL	DL	SL	SLQ	H2O+	RD4K	72	82
163Hz	DC CD Clamp	•	•												
208Hz	DC CD Clamp	•	•												
273Hz	DC CD Clamp	•	•												
340Hz	DC CD Clamp	•	•												
400Hz	DC CD Clamp	•	•												
440Hz	DC CD Clamp	•	•												
460Hz	DC CD Clamp	•	•												
480Hz	DC CD Clamp	•	•												
484Hz	DC CD Clamp	•	•												
491Hz	DC CD Clamp	•	•												
512Hz	DC CD Clamp	•	•	•	•	•	•	•	•		•			•	•
570Hz	DC CD Clamp	•	•	•											•
577Hz	DC CD Clamp	•	•	•		•									•
640Hz	DC CD Clamp	•	•	•		•	•	•	•					•	•
760Hz	DC CD Clamp	•	•	•											•
870Hz	DC CD Clamp	•	•	•		•									•
920Hz	DC CD Clamp			•											•
940Hz	DC Induction CD Clamp	•	•	•	•	•									•
982Hz	DC CD Clamp			•	•										
1090Hz	DC CD Clamp			•	•										•
1450Hz	DC CD Clamp			•	•										•
4kHz (4096Hz)	DC Induction Clamp CD Clamp LPC/LCC	•	•	•	•	•							•		•
8kHz (8192Hz)	DC Induction Clamp LPC/LCC	•	•	•	•	•	•	•	•	•	•	•	•	•	•
8440Hz	DC Induction Clamp LPC/LCC			•	•										•

Active Frequencies	Operation Mode	PTL	PTLM	PDL	PDLU	PXL	TL	PL	DL	SL	SLQ	H2O+	RD4K	72	82
9.8kHz (9820Hz)	DC Induction Clamp CD Clamp LPC/LCC	•	•	•								•			•
33kHz (32,768Hz)	DC Induction Clamp LPC/LCC	•	•	•	•	•	•	•	•	•	•	•	•	•	•
65kHz (65,536Hz)	DC Induction Clamp CD Clamp LPC/LCC	•	•	•		•	•	•	•	•	•	•	•	•	•
82kHz (82,000Hz)	DC Induction Clamp CD Clamp LPC/LCC			•	•									•	•
83kHz (83,000Hz)	DC Induction Clamp CD Clamp LPC/LCC												•		
83kHz (83,077Hz)	DC Induction Clamp CD Clamp LPC/LCC	•	•	•		•				•	•	•		•	•
131kHz (131,072Hz)	DC Induction Clamp CD Clamp LPC/LCC	•	•	•		•	•	•	•	•	•	•		•	•
200kHz	DC Induction Clamp CD Clamp LPC/LCC	•	•	•		•	•					•		•	•

(*) DC = Direct Connection, LPC = Live Plug Connector, LCC= Live Plug Connector

13.13 TX 10-B iLOC Fault Find locator models

CD pairs	PTL	PTLM	PDL	PDLU	TL	PL	H2O+	82
8KFF	•	•	•		•	•		•
CDFF (See Current Direction)	•	•	•	•			•	•

13.14 TX 10-B iLOC locator models Current Direction (CD) frequencies

CD pairs	PTL	PTLM	PDL	PDLU	H2O+	82
219.9Hz / 439.8Hz	•	•				•
256Hz / 512Hz	•	•	•			•
280Hz / 560Hz	•	•	•			•
285Hz / 570Hz	•	•				•
320Hz / 640Hz	•	•	•			•
380Hz / 760Hz	•	•	•	•		•
460Hz / 920Hz			•			•
680Hz / 340Hz (INV)	•	•				•
800Hz / 400Hz (INV)	•	•				•
920Hz / 460Hz (INV)	•	•				•
968Hz / 484Hz (INV)	•	•				•
1168Hz / 584Hz (INV)	•	•				•
1248Hz / 624Hz (INV)	•	•				•
4096 / 8192Hz 'MFCD'	•	•	•	•	•	•

13.15 List of supported accessories

Locator Accessories		
High Gain Stethoscope		10/RX-STETHOSCOPE-HG
Small Stethoscope		10/RX-STETHOSCOPE-S
Large Stethoscope		10/RX-STETHOSCOPE-L
CD Stethoscope		10/RX-CD-STETHOSCOPE
640Hz Submersible DD Antenna (10m Cable)		10/RX-SUBANTENNA-640

8kHz Submersible DD Antenna (10m Cable)		10/RX-SUBANTENNA-8K
512Hz Submersible DD Antenna (10m Cable)		10/RX-SUBANTENNA-512
Additional Submersible Cable Length (Per Meter)		10/RX-SUBANTENNA-CABLE
Submersible Antenna Adaptor		10/RX-SUBANTENNA-ADAPTOR
Headphones		10/RX-HEADPHONES
A-Frame (includes A-Frame Lead)	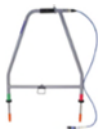	10/RX-AFRAME
A-Frame Bag		10/RX-AFRAME-BAG
A-Frame Lead		10/RX-AFRAME-LEAD
2" (50mm) Locator Clamp		10/RX-CLAMP-2 or 10/RX-CLAMP-50
4" (100mm) Locator Clamp		10/RX-CLAMP-4 or 10/RX-CLAMP-100
5" (130mm) Locator Clamp		10/RX-CLAMP-5 or 10/RX-CLAMP-130
Locator CD/CM Clamp (Current Direction and Current Measurement)		10/RX-CD-CLAMP

Locator mobile phone holder - complete kit		10/RX-PHONE-HOLDER-K
Locator tablet holder - complete kit		10/RX-TABLET-7-8-HOLDER-K
Mobile device support bracket and arm		10/RX-HOLDER-MOUNT
Mobile phone holder		10/RX-PHONE-HOLDER
7"-8" tablet holder		10/RX-TABLET-7-8-HOLDER
Bracket adapter for RAM mounts		10/RX-RAM-ADPT
Bracket O-ring set for mobile devise holder (spare set of 2 O-rings)		10/RX-RAM-ADPT-ORING

Transmitter Accessories		
Live Plug Connector		10/TX-LPC-XX *(XX= EU, UK, US)*
Live Cable Connector (with Crocodile clips)		10/TX-LCC
2" (50mm) Transmitter Clamp		10/TX-CLAMP-2 or 10/TX-CLAMP-50
4" (100mm) Transmitter Clamp		10/TX-CLAMP-4 or 10/TX-CLAMP-100
5" (130mm) Transmitter Clamp		10/TX-CLAMP-5 or 10/TX-CLAMP-130
8.5” (215mm) Transmitter Clamp		10/TX-CLAMP-8.5 or 10/TX-CLAMP-215
CD Transmitter Clamp		10/TX-CD-CLAMP
Signal Clamp Extension Rod		10/TX-CLAMP-EXTROD
Transmitter Connection Kit Contains Earth Reel, Earth Stake, Direct Connection Lead and Magnet		10/TX-CONNECTION-KIT
Transmitter Connection Kit Contains Earth Reel, Earth Stake, Direct Connection Lead with banana connectors and Magnet		10/TX-CONNECTION-KIT-BAN
Earth Lead 10m and Magnet		10/TX-EARTHLEAD-KIT
Earth Lead 10m		10/TX-EARTHLEAD
Hi-strength Magnet with M4 eyebolt		10/TX-MAGNET
Spiral Earth Stake		10/TX-EARTHSTAKE

Tx Direct Connection Lead		10/TX-DC-LEAD
Tx Direct Connection Lead, crocodile clip		10/TX-DC-LEAD-TEL
Tx Direct Connection Lead with banana connectors, insulated plug/socket		10/TX-DC-LEAD-BAN
Tx Direct Connection Lead with banana connectors, Open Grid Europe		10/TX-DC-LEAD-OPEN
Tx-10 Isolation Transformer (for locating 3-phase core-core shorts)		10/TX121-XX *(XX= DE, EN, FR, NL)*

Accessories for tracing or locating non-conductive utilities		
Standard Sonde 33kHz, depth up to 5m		10/SONDE-STD-33
Standard Sonde 8kHz, depth up to 5m		10/SONDE-STD-8
Standard Sonde 512Hz, depth up to 5m, single end		10/SONDE-STD-512
Standard Sonde 512Hz, depth up to 5m, twin end		10/SONDE-STD-512-TW
Sewer Sonde 33kHz, depth up to 8m		10/SONDE-SEWER-33
Super Sonde 33kHz, depth up to 15m		10/SONDE-SUPER-33
4.5" (115mm) Diameter Floats/Pair for Sewer and Super Sondes		10/SONDE-FLOATS
S6 Microsonde Kit, incl. battery and case		10/SONDE-MICRO-33
Pack of 10 × Batteries for S6 Microsonde		10/SONDE-MICRO-BATPACK

S9 MiniSonde, incl. battery and case		10/SONDE-MINI-33
Pack of 10 × Batteries for S9 MiniSonde		10/SONDE-MINI-BATPACK
S13 Sonde Kit (includes M10 Stud and Plain End Caps, two Batteries and Case)		10/SONDE-S13-33
Pack of ten spare Batteries for S13 Sonde		10/SONDE-S13-BATPACK
S18A Sonde 33kHz with M10 Stud End Cap and one D1/3N battery		10/SONDE-S18A-33
S18A Sonde 33kHz Kit with M10 Stud and Plain End Caps and two D1/3N Batteries		10/S18-33-KIT
S18A M10 Stud End Cap with one D1/3N Battery		10/S18-M10-ENDCAP
S18A Extended Plain Cap with one D1/3N Battery		10/S18-PLAINENDCAP
S18A Pack of 5 D1/3N Batteries		10/S18-BATTERYPACK
S18B Sonde 33kHz with Extended Aluminium End Cap for two AA Batteries (batteries included)		10/SONDE-S18B-33
S18B Sonde Aluminium AA Batteries End Cap (batteries included)		10/S18-AA-ENDCAP
Bendi Sonde with M10 Male End Cap (512Hz continuous)		10/SONDE-BENDI-512
Pack of 5 AA Batteries		10/SONDE-BENDI-BATPACK
FlexiTrace 50m (Tx powered pushrod transmitter)		10/TRACE50-XX *XX = D, F, GB, NL)*
FlexiTrace 80m (Tx powered pushrod transmitter)		10/TRACE80-XX (*XX = D, F, GB, NL)*
4.5mm 50m Flexrod		10/FLEXRODF50-4.5
4.5mm 80m Flexrod		10/FLEXRODF80-4.5

6.7mm 50m Flexrod		10/FLEXRODF50-7
6.7mm 100m Flexrod		10/FLEXRODF100-7
6.7mm 150m Flexrod		10/FLEXRODF150-7
9mm 60m Flexrod		10/FLEXRODF60-9
9mm 120m Flexrod		10/FLEXRODF120-9
M6 to M10 adapter to interface 6.7mm rod with RD M10 thread		10/6-10FLEXRODADAPTOR
Spring Coupling M10 Male		10/SU0335
Wards Rod Connector, 3/4" (19mm) x 10 BSW, Female		02/SU0341
Wards Rod Connector, 1/2" (13mm) x 12 BSW, Female		02/SU0342
"Lockfast" Connector, 3/4" (19mm) x 10 BSW		02/SU0676

Locator power accessories and spares		
Li-Ion rechargeable battery pack with mains charger (includes power lead) (1)		10/RX-MBATPACK-V2-XX
Li-Ion rechargeable battery pack with auto charger (1)		10/RX-ABATPACK-V2
Li-Ion rechargeable battery pack with mains and automotive charger (includes power lead) (1)		10/RX-MABATPACK-V2-XX
2 cells battery tray (2x D Cell / LR20) (2)		10/RX-2DCELL-TRAY

(1) Compatible with RD7200/RD8200, RD8100/RD8100 and Marker (MRX) Locators

(2) Compatible with RD7200/RD8200, RD7100/RD8100 and RD7000+/RD8000 Locators

Replace XX with AU, EU, UK or US

Transmitter power accessories and spares		
Mains PSU (includes power lead)		10/TX-MPSU-XX
12V Car Power Lead with Isolation Transformer		10/TX-APSU
Li-Ion rechargeable battery pack with mains charger (includes power lead) (1)		10/TX-MBATPACK-LION-K-XX
Li-Ion rechargeable battery pack with automotive charger (1)		10/TX-ABATPACK-LION-K
Li-Ion rechargeable battery pack with mains and automotive charger (includes power lead) (1)		10/TX-MABATPACK-LION-K-XX
Li-Ion automotive charger (1)		10/TX-ACHARGER-LION

Li-Ion mains charger (includes power lead) (1)		10/TX-MCHARGER-LION-XX
Li-Ion rechargeable battery pack (no charger) (1)		10/TX-BATPACK-LION
8 cells battery tray (8x D Cell / LR20)		10/TX-8DCELL-TRAY

(1) Li-Ion rechargeable packs cannot be charged in the transmitter

Replace XX with AU, EU, UK or US

Mains Leads		
C7 Mains lead, 6.5' (2m), 2.5A		10/MAINS-LEAD-C7-XX
C13 Mains lead, 6.5' (2m), 2.5A		10/MAINS-LEAD-C13-XX

Replace XX with AU, EU, UK or US

Transport and Storage Accessories		
Locator backpack and bag for Tx transmitter (without tool tray) - set of soft carry bags		10/LOCATOR-BACKPACK-SET
Locator backpack		10/LOCATOR-BACKPACK
Tx transmitter (without tool tray) soft carry bag		10/TX-BAG
Locator and Tx transmitter soft carry bag		10/LOCATORBAG

Locator and Tx transmitter hard case		10/RD7K8KCASE-USA
Locator and Tx transmitter hard flight case with wheels		10/RD7K8KCASE

Calibration Certificates, Remote Calibration and PC Software

Locator Calibration Certificate, per unit (Can be requested with initial locator order, cannot be ordered later)	10/CALCERT
RD Manager Online Check product documentation for details	www.radiodetection.com/rdmanager_online

RADIODETECTION®

SPX TECHNOLOGIES

Our Mission

Provide best in class equipment and solutions, to prevent damage to critical infrastructure, manage assets and protect lives.

Our Vision

To be the world's leader in the management of critical infrastructure and utilities.

Our locations

USA

Raymond, ME
Kearneysville, WV

Canada

Vaughan, ON
Mississauga, ON

Europe

United Kingdom **HQ**
France
Germany
The Netherlands

Asia Pacific

India
China
Hong Kong
Indonesia
Australia

Visit: **www.radiodetection.com** Follow us on:

Scan to see a full list of our office locations

Copyright © 2023 Radiodetection Ltd. All rights reserved. Radiodetection and RD8200 are registered trademarks of Radiodetection in the United States and/or other countries. Trademarks and Notices. The following are trademarks of Radiodetection: RD8200, eCert, TruDepth, SideStep, SideStep*auto*, Peak+, Power Filters, Strike*Alert*, CALSafe, Current Direction, RD Manager Online and RD Map. The design of the RD8200 locators and transmitters has been registered. The design of the 4 chevrons has been registered. RAM is a trademark of National Products Inc. Due to a policy of continued development, we reserve the right to alter or amend any published specification without notice. Due to a policy of continued development, we reserve the right to alter or amend any published specification without notice. Photos are indicative and products received may not be identical to those shown. This document may not be copied, reproduced, transmitted, modified or used, in whole or in part, without the prior written consent of Radiodetection Ltd.

90/RD8200-OM-ENG/07

Cable Locators & Survey